EN

KNX S4-B10 230 V
KNX S2-B6 230 V
KNX S1-B2 230 V
Multifunctional Actuators

Item numbers 70530 (KNX S4-B10 230 V), 70531 (KNX S2-B6 230 V), 70532 (KNX S1-B2 230 V)

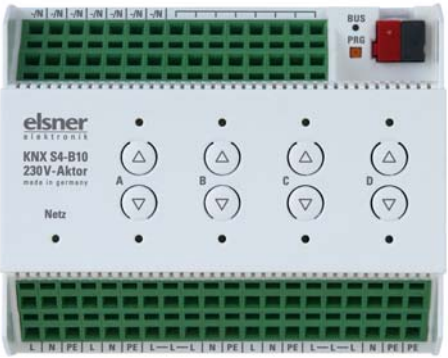

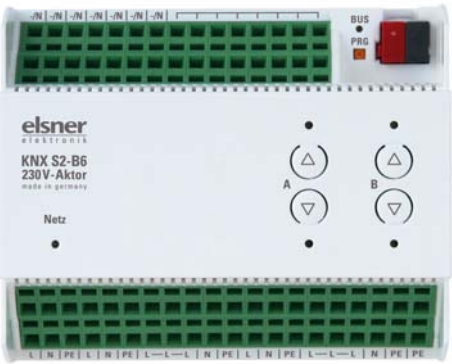

elsner elektronik

Installation and Adjustment

Installation, inspection, commissioning and troubleshooting of the device must only be carried out by a competent electrician.

This manual is amended periodically and will be brought into line with new software releases. The change status (software version and date) can be found in the contents footer. If you have a device with a later software version, please check **www.elsner-elektronik.de** in the menu area "Service" to find out whether a more up-to-date version of the manual is available.

Clarification of signs used in this manual

Safety advice.

Safety advice for working on electrical connections, components, etc.

DANGER! ... indicates an immediately hazardous situation which will lead to death or severe injuries if it is not avoided.

WARNING! ... indicates a potentially hazardous situation which may lead to death or severe injuries if it is not avoided.

CAUTION! ... indicates a potentially hazardous situation which may lead to trivial or minor injuries if it is not avoided.

STOP **ATTENTION!** ... indicates a situation which may lead to damage to property if it is not avoided.

ETS In the ETS tables, the parameter default settings are marked by underlining.

1. Description

The **Actuators KNX S4-B10, KNX S2-B6 and KNX S1-B2 230 V** with integrated facade control have multifunctional outputs, pairs of buttons and monitoring LEDs. Each of the multifunctional outputs can connect to either a drive with Up/Down control (blinds, awnings, shutters, windows) or two switchable devices (On/Off for light and ventilation). The connected drives and devices can be operated directly on the actuator or via connected hand switches.

The automation can be specified externally or internally. Internally, there are numerous options available for blocking, locking (e.g. master-slave) and priority definition (e.g. manual-automatic). Scenes can be saved and called up via the bus (scene control with 16 scenes per drive).

Binary inputs can be used either for direct operation (e.g. hand switches) or as bus switches (or also for e.g. alarm notifications). The desired behaviour can be defined precisely through selection of the response times in Standard, Comfort or Deadman mode.

Functions:

- **Multifunctional outputs** each for a **230 V drive** (shade, window) or for connecting two **switchable devices** (light, fan)
  KNX S4-B10: 4 outputs | KNX S2-B6: 2 outputs | KNX S1-B2: 1 output
- Keypad with **button pairs** and status LEDs
- **Binary inputs** for use as hand switches or as bus switches with variable voltage (6...80 V DC, 6...240 V AC)
  KNX S4-B10: 10 inputs | KNX S2-B6: 6 inputs | KNX S1-B2: 2 inputs
- **Automatic runtime measurement** of the drives for positioning (including fault notification object)
- Position feedback (movement position, also slat position for blinds)
- Position storage (movement position) via 1-bit object (storage and call-up e.g. via button)
- Control via **internal or external automation**
- Integrated **shade control** for each drive output (with **slat tracking** according to sun position for blinds)
- **Scene control** for movement position with 16 scenes per drive (also slat position for blinds)
- Mutual **locking** of two drives using zero position sensors prevents collisions e.g. of shade and window (master–slave)
- Blocking objects and alarm notifications have different priorities, so safety functions always take precedence (e.g. wind block)
- Manual or automatic priority setting via time or communication object
- 5 Safety objects for each channel
- Short time restriction (movement command blocked) and movement limitation

Configuration is made using the KNX software ETS 5. The **product file** can be downloaded from the Elsner Elektronik website on **www.elsner-elektronik.de** in the “Service” menu.

1.0.1. Scope of delivery

- Actuator

1.1. Technical Data

Housing	Plastic
Colour	White
Assembly	Series installation on mounting rails
Protection Category	IP 20
Ambient temperature	Operation -20...+70°C, Storage -55...+90°C
Ambient humidity	max. 95% rH, avoid condensation
Operating voltage	230 V AC, 50 Hz
Current	on Bus: 10 mA
Minimum current for runtime measurement	AC effective 200 mA
Max. cable length Binary inputs	50 m
Data output	KNX +/- Bus connector terminal
BCU type	own microcontroller
PEI type	0
Goup addresses	max. 1024
Assignments	max. 1024

KNX S4-B10 230 V (No. 70530):

Dimensions	approx. 107 x 88 x 60 (W × H × D, mm), 6 dividing units
Weight	approx. 360 g
Power consumption	Operation max. approx. 3.5 W Standby max. approx. 0.6 W
Outputs	4 × outputs each with 2 connections for drive up/down or 2 devices, 230 V (PE/N/1/2), total. max 10 A and max. 4 A per connection
Inputs	10 × binary inputs, universal voltage (6...80V DC, 6...240 V AC)
Communication objects	567

KNX S2-B6 230 V (No. 70531):

Dimensions	approx. 107 x 88 x 60 (W × H × D, mm), 6 dividing units
Weight	ca. 360 g
Power consumption	Operation max. approx, 3.5 W Standby max. ca. 0.6 W
Outputs	2 × outputs with 2 connections for drive Up/Down or 2 devices, 230 V (PE/N/1/2), in total max. 10 A and max. 4 A per connection

Inputs	6 × binary inputs, universal voltage (6...80 V DC, 6...240 V AC)
Communication objects	295

KNX S1-B2 230 V (No. 70532):

Dimensions	approx. 53 x 88 x 60 (W × H × D, mm), 3 dividing units
Weight	approx. 170 g
Power consumption	Operation max. approx, 1.2 W
Output	1 × Output with 2 connections for drive Up/Down or 2 devices, 230 V (PE/N/1/2), in total max. 8 A and max. 4 A per connection
Inputs	2 × binary inputs, universal voltage (6...80 V DC, 6...240 V AC)
Communication objects	141

The products are compliant with the provisions of EU guidelines.

2. Installation and start-up

2.1. Installation notes

Installation, testing, operational start-up and troubleshooting should only be performed by an electrician.

DANGER!
Risk to life from live voltage (mains voltage)!
There are unprotected live components within the device.

- VDE regulations and national regulations are to be followed.
- Ensure that all lines to be assembled are free of voltage and take precautions against accidental switching on.
- Do not use the device if it is damaged.
- Take the device or system out of service and secure it against unintentional use, if it can be assumed, that risk-free operation is no longer guaranteed.

The device is only to be used for its intended purpose. Any improper modification or failure to follow the operating instructions voids any and all warranty and guarantee claims.

After unpacking the device, check it immediately for possible mechanical damage. If it has been damaged in transport, inform the supplier immediately.

The device may only be used as a fixed-site installation; that means only when assembled and after conclusion of all installation and operational start-up tasks and only in the surroundings designated for it.

Elsner Elektronik is not liable for any changes in norms and standards which may occur after publication of these operating instructions.

2.2. Connection

Follow the guidelines and standards for SELV electric circuits while installing and cable laying of the KNX connection and inputs.

Binary inputs:

The connections of the binary inputs including the auxiliary voltage output meet the requirements for SELV electrical circuits. Mixed installation with non-SELV electrical circuits or mixing of different auxiliary voltages is not permitted.

2.2.1. Device Design KNX S4-B10 230 V

The device is designed for series installation on mounting rails and occupies 6 width units.

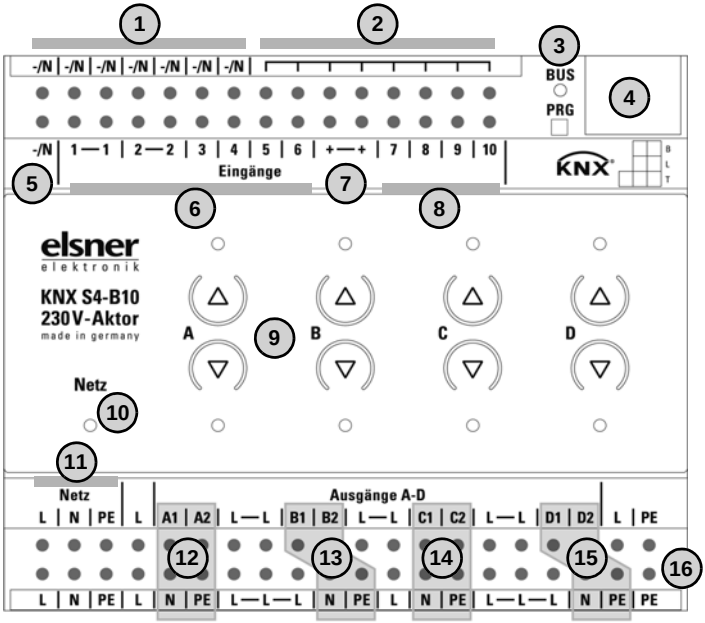

1) *–/N (bridged internally with terminal No. 5). When an external auxiliary voltage is used (6...80 V DC, 6...240 V AC), one of the –/N terminals is to be assigned with – or N*
2) *Free contacts (bridged internally)*
3) *Programmer LED and programmer buttons (PRG)*
4) *Bus terminal slot (KNX +/-)*
5) *–/N (bridged internally with terminal No. 1).*
6) *Binary inputs 1-6 (1 and 2: two bridged connections)*
7) *Internal auxiliary voltage + 24 V DC. Only for binary inputs!*
   Do not assign any external voltage!
8) *Binary inputs 7-10*
9) *Up/Down button pairs and LEDs channel A-D*
10) *Power LED, Indication of operation mode. See “Indication of operation mode with the Power LED” on page 11.*
11) *Operating voltage input 230 V AC L/N/PE*
12) *Output A1 - A2: "Up"-"Down" or "Device1"-"Device2", max. 4 A*
13) *Output B1 - B2: "Up"-"Down" or "Device1"-"Device2", max. 4 A*
14) *Output C1 - C2: "Up"-"Down" or "Device1"-"Device2", max. 4 A*
15) *Output D1 - D2: "Up"-"Down" or "Device1"-"Device2", max. 4 A*

N° 12-15 together max. 10 A

16) *All terminals L, N, PE of the lower connection strip are bridged internally with „Main L, N, PE“.*

2.2.2. Device Design KNX S2-B6 230 V

The device is designed for series installation on mounting rails and occupies 6 width units.

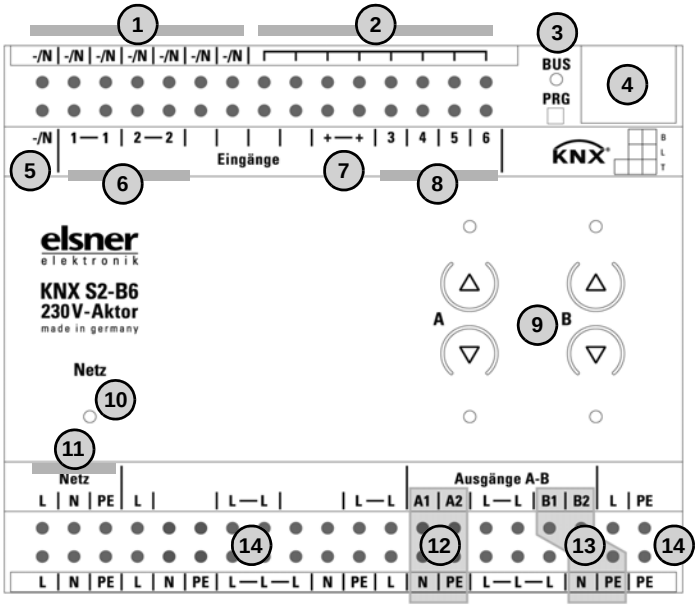

1) –/N (bridged internally with terminal No. 5). When an external auxiliary voltage is used (6...80 V DC, 6...240 V AC), one of the –/N terminals is to be assigned with – or N
2) Free contacts (bridged internally)
3) Programming LED and programming buttons (PRG)
4) Bus terminal slot (KNX +/-)
5) –/N (bridged internally with terminals No. 1)
6) Binary inputs 1-2 (two bridged connections)
7) Internal auxiliary voltage + 24 V DC. Only for binary inputs!
   Do not assign any external voltage!
8) Binary inputs 3-6
9) Up/Down button pairs and LEDs channel A-B
10) Mains LED (Power), mode status display. See “Indication of operation mode with the Power LED” on page 11.
11) Operating voltage input 230 V AC L/N/PE
12) Output A1 - A2: "Up"-"Down" respectively "Device1"-"Device2", max. 4 A
13) Output B1 - B2: "Up"-"Down" respectively "Device1"-"Device2", max. 4 A
14) All terminals L, N , PE of the lower connection strip are bridged internally with „main L, N, PE“.

No. 12-13 in total max. 10 A

2.2.3. Device Design KNX S1-B2 230 V

The device is designed for series installation on mounting rails and occupies 3 width units.

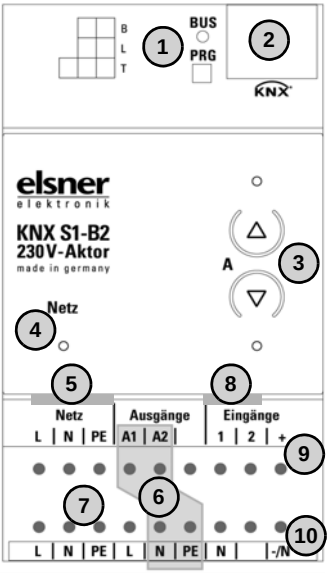

1) *Programming LED and programming buttons (PRG)*
2) *Bus terminal slot (KNX +/-)*
3) *Switch pair Up/Down and LEDs*
4) *Mains LED (Power), mode status display. See “Indication of operation mode with the Power LED” on page 11.*
5) *Operating voltage input 230 V AC L/N/PE*
6) *Output A1 - A2: "Up"-"Down" respectively "Device1"-"Device2", max. 4 A*
7) *All terminals L, N, PE of the lower connection strip are bridged internally with „Main L, N, PE“.*
8) *Binary inputs 1-2*
9) *Internal auxiliary voltage + 24 V DC. Only for binary inputs!* ***Do not assign any external voltage!***
10) *-/N for external auxiliary voltage (6...80 V DC, 6...240 V AC)*

2.2.4. Indication of operation mode with the Power LED

Behaviour	Colour	
On	Green	Normal operation. Bus connection/bus voltage available.
Flashes	Green	Normal operation. No bus connection/bus voltage available.
On	Orange	Device starts up or is beeing programmed via the ETS. No automatic functions are executed.
Flashes	Green (on) Orange (flashing)	Programming mode active.

2.2.5. Status display by the channel LEDs

Behaviour	LED	
To	top	Drive in top end position/device on.
To	bottom	Drive in bottom end position/drive on.
Flashes slowly	top	Drive moves up.
Flashes slowly	bottom	Drive moves down.
Flashes quickly	top	Drive in top end position, blocking active.
Flashes quickly	bottom	Drive in bottom position, blocking active.
Flashes quickly	both simultaneously	Drive in intermediate position, blocking active.
Extend	both	Drive in intermediate position.
Flashes	both alternately	Automatic runtime determination error. If the drive can be moved, drive it into the end position by hand (drive in/drive out completely or open/close) in order to restart the runtime determination. If the drive cannot be moved, check the connections.
"Runlight" above all LEDs	all channels	Incorrect application version was loaded. Use the version compatible with the device!

2.3. Notes on mounting and commissioning

Device must not be exposed to water (rain). This could result in the electronic being damaged. A relative air humidity of 95% must not be exceeded. Avoid bedewing.

After the operating voltage has been applied, the device will enter an initialisation phase lasting a few seconds. During this phase no information can be received or sent via the bus.

For KNX devices with safety functions (e.g. wind or rain blocks), periodical monitoring of the safety objects must be set up. The optimal ratio is 1:3 (example: if the weather station sends a value every 5 minutes, the actuator must be configured for a monitoring period of 15 minutes).

2.4. Connection examples for binary inputs KNX S4-B10 and KNX S2-B6

2.4.1. Using the internal auxiliary voltage of the actuator

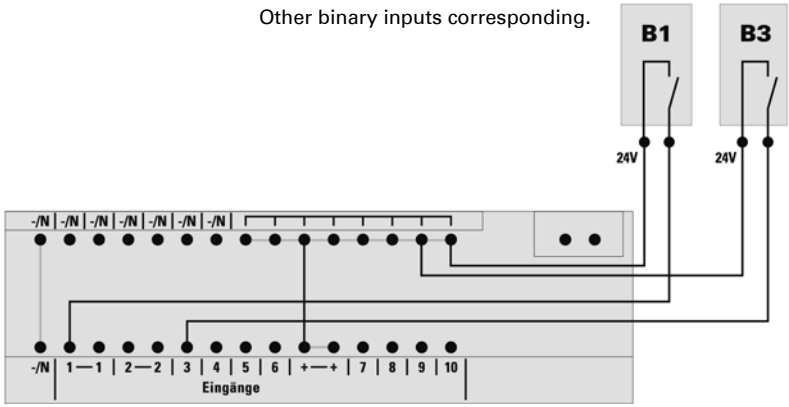

2.4.2. Using an external voltage

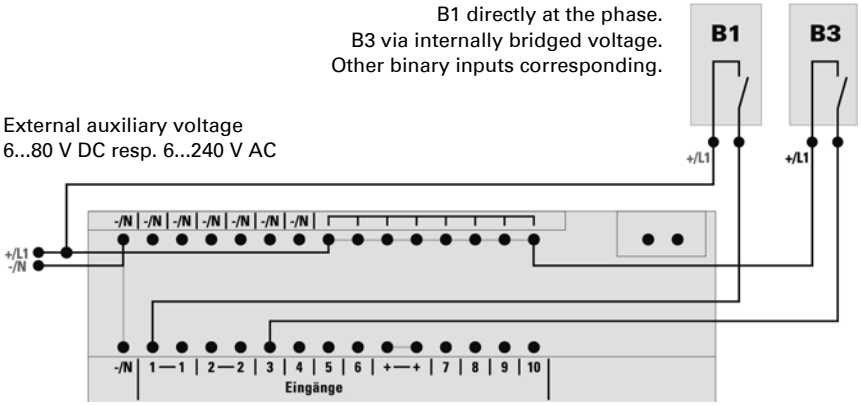

2.5. Connecting example for binary inputs KNX S1-B2 230 V

2.5.1. Using the internal auxiliary voltage of the actuator

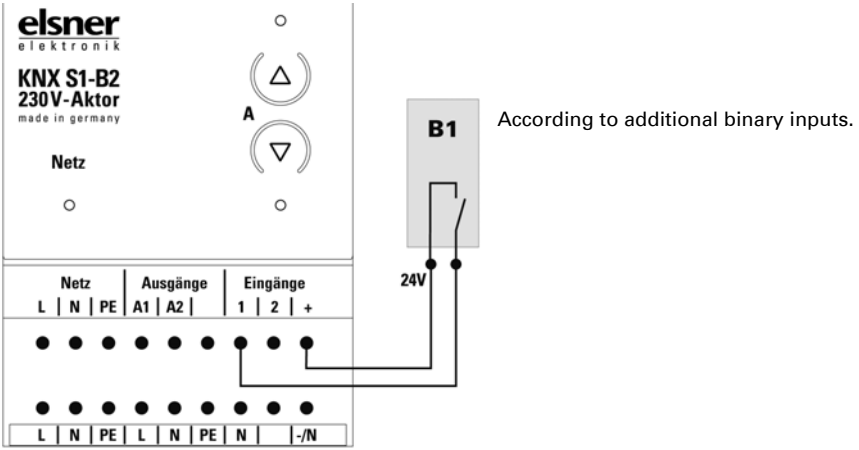

2.5.2. Using an external auxiliary voltage

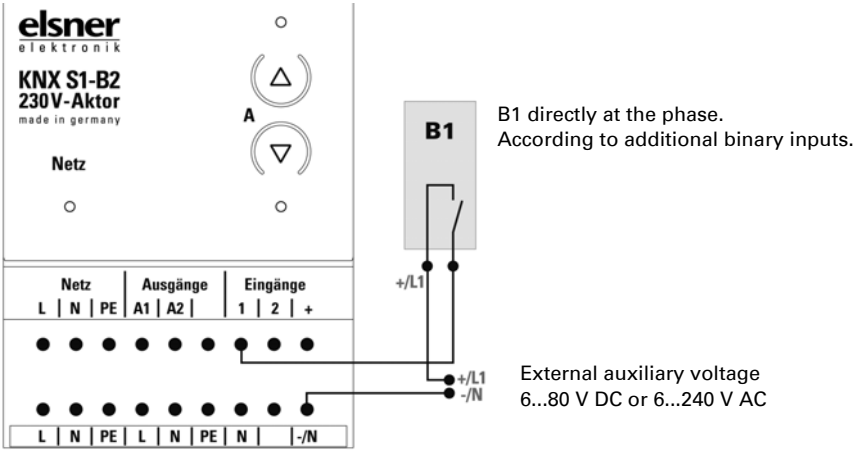

3. Transfer protocol

3.1. List of all communication objects

Abbreviations:
R Read
W Write
C Communication
T Transfer

No.	Name	Function	Flags	Data Point Type	Size
1	Software version	Readable	R-C-	[217.1] DPT_Version	2 Bytes
Only KNX S4-B10 and KNX S2-B6					
50	Input 1 long term	Input / output	RWCT	[1.8] DPT_UpDown	1 Bit
51	Input 1 short term	Output	R-CT	[1.8] DPT_UpDown	1 Bit
52	Input 1 switching	Input / output	RWCT	[1.1] DPT_Switch	1 Bit
53	Input 1 dim relative	Input / output	RWCT	[3.7] DPT_Control_Dimming	4 Bit
54	Input 1 encoder 8 bit	Output	R-CT	[5] 5.xxx	1 Byte
55	Input 1 encoder temperature	Output	R-CT	[9.1] DPT_Value_Temp	2 Bytes
56	Input 1 encoder brightness	Output	R-CT	[9.4] DPT_Value_Lux	2 Bytes
57	Input 1 scene	Output	R-CT	[18.1] DPT_SceneControl	1 Byte
58	Input 1 blocking object	Input	RWC-	[1.1] DPT_Switch	1 Bit
60	Input 2 long term	Input / output	RWCT	[1.8] DPT_UpDown	1 Bit
61	Input 2 short term	Output	R-CT	[1.8] DPT_UpDown	1 Bit
62	Input 2 switching	Input / output	RWCT	[1.1] DPT_Switch	1 Bit
63	Input 2 dim relative	Input / output	RWCT	[3.7] DPT_Control_Dimming	4 Bit
64	Input 2 encoder 8 bit	Output	R-CT	[5] 5.xxx	1 Byte
65	Input 2 encoder temperature	Output	R-CT	[9.1] DPT_Value_Temp	2 Bytes
66	Input 2 encoder brightness	Output	R-CT	[9.4] DPT_Value_Lux	2 Bytes
67	Input 2 scene	Output	R-CT	[18.1] DPT_SceneControl	1 Byte

No.	Name	Function	Flags	Data Point Type	Size
68	Input 2 blocking object	Input	RWC-	[1.1] DPT_Switch	1 Bit
All models					
100	Channel A status automatic or manual	Output	R-CT	[1] 1.xxx	1 Bit
101	Channel A manual long term	Input	RWC-	[1.8] DPT_UpDown	1 Bit
102	Channel A manual short term	Input	RWC-	[1.8] DPT_UpDown	1 Bit
103	Channel A manual movement position	Input	RWC-	[5.1] DPT_Scaling	1 Byte
104	Channel A manual slat position	Input	RWC-	[5.1] DPT_Scaling	1 Byte
105	Channel A automatic long term	Input	RWC-	[1.8] DPT_UpDown	1 Bit
106	Channel A automatic short term	Input	RWC-	[1.8] DPT_UpDown	1 Bit
107	Channel A automatic movement position	Input	RWC-	[5.1] DPT_Scaling	1 Byte
108	Channel A automatic slat position	Input	RWC-	[5.1] DPT_Scaling	1 Byte
109	Channel A switch from manual to automatic	Input	RWC-	[1] 1.xxx	1 Bit
110	Channel A automatic blocking object	Input	RWC-	[1.1] DPT_Switch	1 Bit
111	Channel A current movement position	Output	R-CT	[5.1] DPT_Scaling	1 Byte
112	Channel A current slat position	Output	R-CT	[5.1] DPT_Scaling	1 Byte
113	Channel A status object	Output	R-CT	[1] 1.xxx	1 Bit
114	Channel A - Approach position memory manually	Input	RWC-	[1.1] DPT_Switch	1 Bit
115	Channel A - Learn object 0 position memory manually	Input	RWC-	[1.1] DPT_Switch	1 Bit
116	Channel A - Learn object 1 position memory manually	Input	RWC-	[1.1] DPT_Switch	1 Bit
119	Channel A - Approach position memory automatically	Input	RWC-	[1.1] DPT_Switch	1 Bit
120	Channel A - Learn object 0 position memory automatically	Input	RWC-	[1.1] DPT_Switch	1 Bit
121	Channel A - Learn object 1 position memory automatically	Input	RWC-	[1.1] DPT_Switch	1 Bit

No.	Name	Function	Flags	Data Point Type	Size
124	Channel A call saving scenes	Input	RWC-	[18.1] DPT_SceneControl	1 Byte
125	Channel A outdoor temperature Blocking object	Input	RWC-	[1.1] DPT_Switch	1 Bit
126	Channel A outdoor temperature blocking measurement value	Input	RWC-	[9.1] DPT_Value_Temp	2 Bytes
127	Channel A outdoor temperature blocking status	Output	R-CT	[1.1] DPT_Switch	1 Bit
128	Channel A twilight object	Input	RWC-	[1.1] DPT_Switch	1 Bit
129	Channel A twilight measurement value	Input	RWC-	[9.4] DPT_Value_Lux	2 Bytes
130	Channel A twilight status	Output	R-CT	[1.1] DPT_Switch	1 Bit
131	Channel A time control	Input	RWC-	[1.1] DPT_Switch	1 Bit
132	Channel A inside temperature release object	Input	RWC-	[1.1] DPT_Switch	1 Bit
133	Channel A inside temperature release measurement value	Input	RWC-	[9.1] DPT_Value_Temp	2 Bytes
134	Channel A inside temperature release target value	Input	RWC-	[9.1] DPT_Value_Temp	2 Bytes
135	Channel A inside temperature release status	Output	R-CT	[1.1] DPT_Switch	1 Bit
136	Channel A shading object	Input	RWC-	[1.1] DPT_Switch	1 Bit
137	Channel A shading brightness Measurement value 1	Input	RWC-	[9.4] DPT_Value_Lux	2 Bytes
138	Channel A shading brightness Measurement value 2	Input	RWC-	[9.4] DPT_Value_Lux	2 Bytes
139	Channel A shading brightness Measurement value 3	Input	RWC-	[9.4] DPT_Value_Lux	2 Bytes
140	Channel A shading threshold value	Input / output	RWCT	[9.4] DPT_Value_Lux	2 Bytes
141	Channel A shading threshold value 1 = + | 0 = -	Input	RWC-	[1] 1.xxx	1 Bit
142	Channel A shading threshold value +	Input	RWC-	[1] 1.xxx	1 Bit
143	Channel A shading threshold value -	Input	RWC-	[1] 1.xxx	1 Bit
144	Channel A shading status	Output	R-CT	[1.1] DPT_Switch	1 Bit

No.	Name	Function	Flags	Data Point Type	Size
145	Channel A shading position Teaching object	Input	RWC-	[1] 1.xxx	1 Bit
146	Channel A azimuth	Input	RWC-	[9] 9.xxx	2 Bytes
147	Channel A elevation	Input	RWC-	[9] 9.xxx	2 Bytes
148	Channel A cold air supply blocking object	Input	RWC-	[1.1] DPT_Switch	1 Bit
149	Channel A cold air supply outside temperature measurement value	Input	RWC-	[9.1] DPT_Value_Temp	2 Bytes
150	Channel A cold supply air blocking status	Output	R-CT	[1.1] DPT_Switch	1 Bit
151	Channel A forced ventilation	Input	RWC-	[1.1] DPT_Switch	1 Bit
152	Channel A warm air supply blocking object	Input	RWC-	[1.1] DPT_Switch	1 Bit
153	Channel A warm air supply inside temperature measurement value	Input	RWC-	[9.1] DPT_Value_Temp	2 Bytes
154	Channel A warm air supply outside temperature measurement value	Input	RWC-	[9.1] DPT_Value_Temp	2 Bytes
155	Channel A warm air supply blocking target value	Input	RWC-	[9.1] DPT_Value_Temp	2 Bytes
156	Channel A warm air supply blocking status	Output	R-CT	[1.1] DPT_Switch	1 Bit
157	Channel A inside temperature opening object	Input	RWC-	[1.1] DPT_Switch	1 Bit
158	Channel A inside temperature opening measurement value	Input	RWC-	[9.1] DPT_Value_Temp	2 Bytes
159	Channel A inside temperature opening target value	Input	RWC-	[9.1] DPT_Value_Temp	2 Bytes
160	Channel A inside temperature opening threshold value	Input / output	RWCT	[9.1] DPT_Value_Temp	2 Bytes
161	Channel A inside temperature opening threshold value 1 = +	Input	RWC-	[1] 1.xxx	1 Bit
162	Channel A inside temperature opening threshold value +	Input	RWC-	[1] 1.xxx	1 Bit
163	Channel A inside temperature opening threshold value -	Input	RWC-	[1] 1.xxx	1 Bit

No.	Name	Function	Flags	Data Point Type	Size
164	Channel A inside temperature opening status	Output	R-CT	[1.1] DPT_Switch	1 Bit
165	Channel A inside humidity opening object	Input	RWC-	[1.1] DPT_Switch	1 Bit
166	Channel A inside humidity opening Measurement value	Input	RWC-	[9.7] DPT_Value_Humidity	2 Bytes
167	Channel A inside humidity opening status	Output	R-CT	[1.1] DPT_Switch	1 Bit
170	Channel A zero position reached	Input	RWC-	[1.1] DPT_Switch	1 Bit
171	Channel A zero position sensor malfunctioning	Output	R-CT	[1.1] DPT_Switch	1 Bit
172	Channel A master zero position status	Output	R-CT	[1.1] DPT_Switch	1 Bit
173	Channel A master zero position command	Output	R-CT	[1.1] DPT_Switch	1 Bit
174	Channel A slave zero position status	Input	RWC-	[1.1] DPT_Switch	1 Bit
175	Channel A master zero position status	Input	RWC-	[1.1] DPT_Switch	1 Bit
176	Channel A master zero position command	Input	RWC-	[1.1] DPT_Switch	1 Bit
177	Channel A slave zero position status	Output	R-CT	[1.1] DPT_Switch	1 Bit
178	Channel A drive moving	Output	R-CT	[1] 1.xxx	1 Bit
179	Channel A malfunction object	Output	R-CT	[1] 1.xxx	1 Bit
180	Channel A block 1 blocking object	Input	RWC-	[1.1] DPT_Switch	1 Bit
181	Channel A block 1 wind blocking object	Input	RWC-	[1.1] DPT_Switch	1 Bit
182	Channel A block 1 wind blocking Measurement value	Input	RWC-	[9.5] DPT_Value_Wsp	2 Bytes
183	Channel A block 1 wind blocking status	Output	R-CT	[1.1] DPT_Switch	1 Bit
184	Channel A block 1 rain blocking object	Input	RWC-	[1.1] DPT_Switch	1 Bit
185	Channel A block 2 blocking object	Input	RWC-	[1.1] DPT_Switch	1 Bit
186	Channel A block 2 wind blocking object	Input	RWC-	[1.1] DPT_Switch	1 Bit

No.	Name	Function	Flags	Data Point Type	Size
187	Channel A block 2 wind blocking object	Input	RWC-	[9.5] DPT_Value_Wsp	2 Bytes
188	Channel A block 2 wind blocking Measurement value	Input	R-CT	[1.1] DPT_Switch	1 Bit
189	Channel A block 2 wind blocking status	Output	RWC-	[1.1] DPT_Switch	1 Bit
190	Channel A block 2 rain blocking object	Input	RWC-	[1.1] DPT_Switch	1 Bit
191	Channel A block 3 blocking object	Input	RWC-	[1.1] DPT_Switch	1 Bit
192	Channel A block 3 wind blocking object	Input	RWC-	[9.5] DPT_Value_Wsp	2 Bytes
193	Channel A block 3 wind blocking Measurement value	Input	R-CT	[1.1] DPT_Switch	1 Bit
194	Channel A block 3 wind blocking status	Output	RWC-	[1.1] DPT_Switch	1 Bit
195	Channel A block 3 rain blocking object	Input	RWC-	[1.1] DPT_Switch	1 Bit
196	Channel A block 4 blocking object	Input	RWC-	[1.1] DPT_Switch	1 Bit
197	Channel A block 4 wind blocking object	Input	RWC-	[9.5] DPT_Value_Wsp	2 Bytes
198	Channel A block 4 wind blocking Measurement value	Input	R-CT	[1.1] DPT_Switch	1 Bit
199	Channel A block 4 wind blocking status	Output	RWC-	[1.1] DPT_Switch	1 Bit
200	Channel A block 4 rain blocking object	Input	RWC-	[1.1] DPT_Switch	1 Bit
201	Channel A block 5 blocking object	Input	RWC-	[1.1] DPT_Switch	1 Bit
202	Channel A block 5 wind blocking Measurement value	Input	RWC-	[9.5] DPT_Value_Wsp	2 Bytes
203	Channel A block 5 wind blocking status	Output	R-CT	[1.1] DPT_Switch	1 Bit
204	Channel A block 5 rain blocking object	Input	RWC-	[1.1] DPT_Switch	1 Bit
205	Channel A - Movement limitation 1 - blocking object	Input	RWC-	[1.1] DPT_Switch	1 Bit
206	Channel A - Movement limitation 2 - blocking object	Input	RWC-	[1.1] DPT_Switch	1 Bit

No.	Name	Function	Flags	Data Point Type	Size
207	Channel A - Short time restriction	Input	RWC-	[1.1] DPT_Switch	1 Bit
210	Channel A1 - switching	Input	RWC-	[1.1] DPT_Switch	1 Bit
211	Channel A1 - feedback	Output	R-CT	[1.1] DPT_Switch	1 Bit
212	Channel A1 - status	Readable	R-C-	[1.1] DPT_Switch	1 Bit
213	Channel A1 - blocking object	Input	RWC-	[1.1] DPT_Switch	1 Bit
215	Channel A1 start stair case light function	Input	-WC-	[1.10] DPT_Start	1 Bit
216	Channel A1 start stop stair case light function	Input	RWC-	[1.10] DPT_Start	1 Bit
217	Channel A1 connection	Input	RWC-	[1.2] DPT_Bool	1 Bit
218	Channel A1 - Call up / saving scenes	Input	RWC-	[18.1] DPT_SceneControl	1 Byte
220	Channel A2 switching	Input	RWC-	[1.1] DPT_Switch	1 Bit
221	Channel A2 feedback	Output	R-CT	[1.1] DPT_Switch	1 Bit
222	Channel A2 status	Readable	R-C-	[1.1] DPT_Switch	1 Bit
223	Channel A2 blocking object	Input	RWC-	[1.1] DPT_Switch	1 Bit
225	Channel A2 start stair case light function	Input	-WC-	[1.10] DPT_Start	1 Bit
226	Channel A2 start stop stair case light function	Input	RWC-	[1.10] DPT_Start	1 Bit
227	Channel A2 connection	Input	RWC-	[1.2] DPT_Bool	1 Bit
228	Channel A2 - Call up / saving scenes	Input	RWC-	[18.1] DPT_SceneControl	1 Byte
249	Channel A - local operation blocking object	Input	RWC-	[1.1] DPT_Switch	1 Bit
On KNX S1-B2: Input 3 = Input 1, Input 4 = Input 2					
250-258	Input 3 (see Input 1)				
260-268	Input 4 (see Input 1)				
Only KNX S4-B10, KNX S2-B6					
300	Channel B status automatic or manual	Output	R-CT	[1] 1.xxx	1 Bit
301	Channel B manual long term	Input	RWC-	[1.8] DPT_UpDown	1 Bit
302	Channel B manual short term	Input	RWC-	[1.8] DPT_UpDown	1 Bit
303	Channel B manual movement position	Input	RWC-	[5.1] DPT_Scaling	1 Byte
304	Channel B manual slat position	Input	RWC-	[5.1] DPT_Scaling	1 Byte

No.	Name	Function	Flags	Data Point Type	Size
305	Channel B automatic long term	Input	RWC-	[1.8] DPT_UpDown	1 Bit
306	Channel B automatic short term	Input	RWC-	[1.8] DPT_UpDown	1 Bit
307	Channel B automatic movement position	Input	RWC-	[5.1] DPT_Scaling	1 Byte
308	Channel B automatic slat position	Input	RWC-	[5.1] DPT_Scaling	1 Byte
309	Channel B switch from manual to automatic	Input	RWC-	[1] 1.xxx	1 Bit
310	Channel B automatic blocking object	Input	RWC-	[1.1] DPT_Switch	1 Bit
311	Channel B current movement position	Output	R-CT	[5.1] DPT_Scaling	1 Byte
312	Channel B current slat position	Output	R-CT	[5.1] DPT_Scaling	1 Byte
313	Channel B status object	Output	R-CT	[1] 1.xxx	1 Bit
314	Channel B - Approach position memory manually	Input	RWC-	[1.1] DPT_Switch	1 Bit
315	Channel B - Learn object 0 position memory manually	Input	RWC-	[1.1] DPT_Switch	1 Bit
316	Channel B - Learn object 1 position memory manually	Input	RWC-	[1.1] DPT_Switch	1 Bit
319	Channel B - Approach position memory automatically	Input	RWC-	[1.1] DPT_Switch	1 Bit
320	Channel B - Learn object 0 position memory automatically	Input	RWC-	[1.1] DPT_Switch	1 Bit
321	Channel B - Learn object 1 position memory automatically	Input	RWC-	[1.1] DPT_Switch	1 Bit
324	Channel B call saving scenes	Input	RWC-	[18.1] DPT_SceneControl	1 Byte
325	Channel B outdoor temperature Blocking object	Input	RWC-	[1.1] DPT_Switch	1 Bit
326	Channel B outdoor temperature blocking measurement value	Input	RWC-	[9.1] DPT_Value_Temp	2 Bytes
327	Channel B outdoor temperature blocking status	Output	R-CT	[1.1] DPT_Switch	1 Bit
328	Channel B twilight object	Input	RWC-	[1.1] DPT_Switch	1 Bit
329	Channel B twilight measurement value	Input	RWC-	[9.4] DPT_Value_Lux	2 Bytes

No.	Name	Function	Flags	Data Point Type	Size
330	Channel B twilight status	Output	R-CT	[1.1] DPT_Switch	1 Bit
331	Channel B time control	Input	RWC-	[1.1] DPT_Switch	1 Bit
332	Channel B inside temperature release object	Input	RWC-	[1.1] DPT_Switch	1 Bit
333	Channel B inside temperature release measurement value	Input	RWC-	[9.1] DPT_Value_Temp	2 Bytes
334	Channel B inside temperature release target value	Input	RWC-	[9.1] DPT_Value_Temp	2 Bytes
335	Channel B inside temperature release status	Output	R-CT	[1.1] DPT_Switch	1 Bit
336	Channel B shading object	Input	RWC-	[1.1] DPT_Switch	1 Bit
337	Channel B shading brightness Measurement value 1	Input	RWC-	[9.4] DPT_Value_Lux	2 Bytes
338	Channel B shading brightness Measurement value 2	Input	RWC-	[9.4] DPT_Value_Lux	2 Bytes
339	Channel B shading brightness Measurement value 3	Input	RWC-	[9.4] DPT_Value_Lux	2 Bytes
340	Channel B shading threshold value	Input output	RWCT	[9.4] DPT_Value_Lux	2 Bytes
341	Channel B shading threshold value 1 = + | 0 = -	Input	RWC-	[1] 1.xxx	1 Bit
342	Channel B shading threshold value +	Input	RWC-	[1] 1.xxx	1 Bit
343	Channel B shading threshold value -	Input	RWC-	[1] 1.xxx	1 Bit
344	Channel B shading threshold value	Output	R-CT	[1.1] DPT_Switch	1 Bit
345	Channel B shading position Teaching object	Input	RWC-	[1] 1.xxx	1 Bit
346	Channel B azimuth	Input	RWC-	[9] 9.xxx	2 Bytes
347	Channel B elevation	Input	RWC-	[9] 9.xxx	2 Bytes
348	Channel B cold air supply blocking object	Input	RWC-	[1.1] DPT_Switch	1 Bit
349	Channel B cold air supply outside temperature measurement value	Input	RWC-	[9.1] DPT_Value_Temp	2 Bytes
350	Channel B cold air supply blocking status	Output	R-CT	[1.1] DPT_Switch	1 Bit
351	Channel B forced ventilation	Input	RWC-	[1.1] DPT_Switch	1 Bit

No.	Name	Function	Flags	Data Point Type	Size
352	Channel B warm air supply blocking object	Input	RWC-	[1.1] DPT_Switch	1 Bit
353	Channel B warm air supply inside temperature measurement value	Input	RWC-	[9.1] DPT_Value_Temp	2 Bytes
354	Channel B warm air supply Outside temperature measurement value	Input	RWC-	[9.1] DPT_Value_Temp	2 Bytes
355	Channel B warm air supply blocking target value	Input	RWC-	[9.1] DPT_Value_Temp	2 Bytes
356	Channel B warm air supply blocking status	Output	R-CT	[1.1] DPT_Switch	1 Bit
357	Channel B inside temperature opening object	Input	RWC-	[1.1] DPT_Switch	1 Bit
358	Channel B inside temperature opening measurement value	Input	RWC-	[9.1] DPT_Value_Temp	2 Bytes
359	Channel B inside temperature opening target value	Input	RWC-	[9.1] DPT_Value_Temp	2 Bytes
360	Channel B inside temperature opening threshold value	Input output	RWCT	[9.1] DPT_Value_Temp	2 Bytes
361	Channel B inside temperature opening threshold value 1 = +	Input	RWC-	[1] 1.xxx	1 Bit
362	Channel B inside temperature opening threshold value +	Input	RWC-	[1] 1.xxx	1 Bit
363	Channel B inside temperature opening threshold value-	Input	RWC-	[1] 1.xxx	1 Bit
364	Channel B inside temperature opening status	Output	R-CT	[1.1] DPT_Switch	1 Bit
365	Channel B inside humidity opening object	Input	RWC-	[1.1] DPT_Switch	1 Bit
366	Channel B inside humidity opening Measurement value	Input	RWC-	[9.7] DPT_Value_Humidity	2 Bytes
367	Channel B inside opening status	Output	R-CT	[1.1] DPT_Switch	1 Bit
370	Channel B zero position reached	Input	RWC-	[1.1] DPT_Switch	1 Bit
371	Channel B zero position sensor malfunctioning	Output	R-CT	[1.1] DPT_Switch	1 Bit

No.	Name	Function	Flags	Data Point Type	Size
372	Channel B master zero position status	Output	R-CT	[1.1] DPT_Switch	1 Bit
373	Channel B master zero position command	Output	R-CT	[1.1] DPT_Switch	1 Bit
374	Channel B slave zero position status	Input	RWC-	[1.1] DPT_Switch	1 Bit
375	Channel B master zero position status	Input	RWC-	[1.1] DPT_Switch	1 Bit
376	Channel B master zero position command	Input	RWC-	[1.1] DPT_Switch	1 Bit
377	Channel B slave zero position status	Output	R-CT	[1.1] DPT_Switch	1 Bit
378	Channel B drive moving	Output	R-CT	[1] 1.xxx	1 Bit
379	Channel B malfunction object	Output	R-CT	[1] 1.xxx	1 Bit
380	Channel A block 1 blocking object	Input	RWC-	[1.1] DPT_Switch	1 Bit
381	Channel B block 1 wind blocking object	Input	RWC-	[1.1] DPT_Switch	1 Bit
382	Channel B block 1 wind blocking Measurement value	Input	RWC-	[9.5] DPT_Value_Wsp	2 Bytes
383	Channel B block 1 wind blocking status	Output	R-CT	[1.1] DPT_Switch	1 Bit
384	Channel B block 1 rain blocking object	Input	RWC-	[1.1] DPT_Switch	1 Bit
385	Channel B block 2 blocking object	Input	RWC-	[1.1] DPT_Switch	1 Bit
386	Channel B block 2 wind blocking object	Input	RWC-	[1.1] DPT_Switch	1 Bit
387	Channel B block 2 wind blocking Measurement value	Input	RWC-	[9.5] DPT_Value_Wsp	2 Bytes
388	Channel B block 2 wind blocking status	Output	R-CT	[1.1] DPT_Switch	1 Bit
389	Channel B block 2 rain blocking object	Input	RWC-	[1.1] DPT_Switch	1 Bit
390	Channel B block 3 blocking object	Input	RWC-	[1.1] DPT_Switch	1 Bit
391	Channel B block 3 wind blocking object	Input	RWC-	[1.1] DPT_Switch	1 Bit
392	Channel B block 3 wind blocking Measurement value	Input	RWC-	[9.5] DPT_Value_Wsp	2 Bytes

No.	Name	Function	Flags	Data Point Type	Size
393	Channel B block 3 wind blocking status	Output	R-CT	[1.1] DPT_Switch	1 Bit
394	Channel B block 3 rain blocking object	Input	RWC-	[1.1] DPT_Switch	1 Bit
395	Channel B block 4 blocking object	Input	RWC-	[1.1] DPT_Switch	1 Bit
396	Channel B block 4 wind blocking object	Input	RWC-	[1.1] DPT_Switch	1 Bit
397	Channel B block 4 wind blocking Measurement value	Input	RWC-	[9.5] DPT_Value_Wsp	2 Bytes
398	Channel B block 4 wind blocking status	Output	R-CT	[1.1] DPT_Switch	1 Bit
399	Channel B block 4 rain blocking object	Input	RWC-	[1.1] DPT_Switch	1 Bit
400	Channel B block 5 blocking object	Input	RWC-	[1.1] DPT_Switch	1 Bit
401	Channel B block 5 wind blocking object	Input	RWC-	[1.1] DPT_Switch	1 Bit
402	Channel B block 5 wind blocking Measurement value	Input	RWC-	[9.5] DPT_Value_Wsp	2 Bytes
403	Channel B block 5 wind blocking status	Output	R-CT	[1.1] DPT_Switch	1 Bit
404	Channel B block 5 rain blocking object	Input	RWC-	[1.1] DPT_Switch	1 Bit
405	Channel B - Movement limitation 1 - blocking object	Input	RWC-	[1.1] DPT_Switch	1 Bit
406	Channel B - Movement limitation 2 - blocking object	Input	RWC-	[1.1] DPT_Switch	1 Bit
407	Channel B Short time limit	Input	RWC-	[1.1] DPT_Switch	1 Bit
410	Channel B1 switching	Input	RWC-	[1.1] DPT_Switch	1 Bit
411	Channel B1 feedback	Output	R-CT	[1.1] DPT_Switch	1 Bit
412	Channel B1 status	Readable	R-C-	[1.1] DPT_Switch	1 Bit
413	Channel B1 blocking object	Input	RWC-	[1.1] DPT_Switch	1 Bit
415	Channel B1 start stair case light function	Input	-WC-	[1.10] DPT_Start	1 Bit
416	Channel B1 start stop stair case light function	Input	RWC-	[1.10] DPT_Start	1 Bit
417	Channel B1 connection	Input	RWC-	[1.2] DPT_Bool	1 Bit
418	Channel B1 - Call up / saving scenes	Input	RWC-	[18.1] DPT_SceneControl	1 Byte
420	Channel B2 switching	Input	RWC-	[1.1] DPT_Switch	1 Bit
421	Channel B2 feedback	Output	R-CT	[1.1] DPT_Switch	1 Bit

No.	Name	Function	Flags	Data Point Type	Size
422	Channel B2 status	Readable	R-C-	[1.1] DPT_Switch	1 Bit
423	Channel B2 blocking object	Input	RWC-	[1.1] DPT_Switch	1 Bit
425	Channel B2 start stair case light function	Input	-WC-	[1.10] DPT_Start	1 Bit
426	Channel B2 start stop stair case light function	Input	RWC-	[1.10] DPT_Start	1 Bit
427	Channel B2 connection	Input	RWC-	[1.2] DPT_Bool	1 Bit
428	Channel B2 - Call up / saving scenes	Input	RWC-	[18.1] DPT_SceneControl	1 Byte
All models					
449	Channel B local operation blocking object	Input	RWC-	[1.1] DPT_Switch	1 Bit
Only KNX S4-B10, KNX S2-B6					
450-458	Input 5 (see input 1)				
460-468	Input 6 (see input1)				
Only KNX S4-B10					
500	Channel C status automatic or manual	Output	R-CT	[1] 1.xxx	1 Bit
501	Channel C manual long term	Input	RWC-	[1.8] DPT_UpDown	1 Bit
502	Channel C manual short term	Input	RWC-	[1.8] DPT_UpDown	1 Bit
503	Channel C manual movement position	Input	RWC-	[5.1] DPT_Scaling	1 Byte
504	Channel C manual slat position	Input	RWC-	[5.1] DPT_Scaling	1 Byte
505	Channel C automatic long term	Input	RWC-	[1.8] DPT_UpDown	1 Bit
506	Channel C automatic short term	Input	RWC-	[1.8] DPT_UpDown	1 Bit
507	Channel C automatic movement position	Input	RWC-	[5.1] DPT_Scaling	1 Byte
508	Channel C automatic slat position	Input	RWC-	[5.1] DPT_Scaling	1 Byte
509	Channel C switch from manual to automatic	Input	RWC-	[1] 1.xxx	1 Bit
510	Channel C automatic blocking object	Input	RWC-	[1.1] DPT_Switch	1 Bit
511	Channel C current movement position	Output	R-CT	[5.1] DPT_Scaling	1 Byte
512	Channel C current slat position	Output	R-CT	[5.1] DPT_Scaling	1 Byte

No.	Name	Function	Flags	Data Point Type	Size
513	Channel C status object	Output	R-CT	[1] 1.xxx	1 Bit
514	Channel C - Approach position memory manually	Input	RWC-	[1.1] DPT_Switch	1 Bit
515	Channel C - Learn object 0 position memory manually	Input	RWC-	[1.1] DPT_Switch	1 Bit
516	Channel C - Learn object 1 position memory manually	Input	RWC-	[1.1] DPT_Switch	1 Bit
519	Channel C - Approach position memory automatically	Input	RWC-	[1.1] DPT_Switch	1 Bit
520	Channel C - Learn object 0 position memory automatically	Input	RWC-	[1.1] DPT_Switch	1 Bit
521	Channel C - Learn object 1 position memory automatically	Input	RWC-	[1.1] DPT_Switch	1 Bit
524	Channel C call saving scenes	Input	RWC-	[18.1] DPT_SceneControl	1 Byte
525	Channel C outdoor temperature Blocking object	Input	RWC-	[1.1] DPT_Switch	1 Bit
526	Channel C outdoor temperature blocking measurement value	Input	RWC-	[9.1] DPT_Value_Temp	2 Bytes
527	Channel C outdoor temperature blocking status	Output	R-CT	[1.1] DPT_Switch	1 Bit
528	Channel C twilight object	Input	RWC-	[1.1] DPT_Switch	1 Bit
529	Channel C twilight measurement value	Input	RWC-	[9.4] DPT_Value_Lux	2 Bytes
530	Channel C twilight status	Output	R-CT	[1.1] DPT_Switch	1 Bit
531	Channel C time control	Input	RWC-	[1.1] DPT_Switch	1 Bit
532	Channel C inside temperature release object	Input	RWC-	[1.1] DPT_Switch	1 Bit
533	Channel C inside temperature release measurement value	Input	RWC-	[9.1] DPT_Value_Temp	2 Bytes
534	Channel C inside temperature release target value	Input	RWC-	[9.1] DPT_Value_Temp	2 Bytes
535	Channel C inside temperature release status	Output	R-CT	[1.1] DPT_Switch	1 Bit
536	Channel C shading object	Input	RWC-	[1.1] DPT_Switch	1 Bit
537	Channel C shading brightness Measurement value 1	Input	RWC-	[9.4] DPT_Value_Lux	2 Bytes

No.	Name	Function	Flags	Data Point Type	Size
538	Channel C shading brightness Measurement value 2	Input	RWC-	[9.4] DPT_Value_Lux	2 Bytes
539	Channel C shading brightness Measurement value 3	Input	RWC-	[9.4] DPT_Value_Lux	2 Bytes
540	Channel C shading threshold value	Input output	RWCT	[9.4] DPT_Value_Lux	2 Bytes
541	Channel C shading threshold value 1 = + | 0 = -	Input	RWC-	[1] 1.xxx	1 Bit
542	Channel C shading threshold value +	Input	RWC-	[1] 1.xxx	1 Bit
543	Channel C shading threshold value -	Input	RWC-	[1] 1.xxx	1 Bit
544	Channel C shading status	Output	R-CT	[1.1] DPT_Switch	1 Bit
545	Channel C shading position Teaching object	Input	RWC-	[1] 1.xxx	1 Bit
546	Channel C azimuth	Input	RWC-	[9] 9.xxx	2 Bytes
547	Channel C elevation	Input	RWC-	[9] 9.xxx	2 Bytes
548	Channel C cold air supply blocking object	Input	RWC-	[1.1] DPT_Switch	1 Bit
549	Channel C cold air supply outside temperature measurement value	Input	RWC-	[9.1] DPT_Value_Temp	2 Bytes
550	Channel C cold air supply blocking status	Output	R-CT	[1.1] DPT_Switch	1 Bit
551	Channel C forced ventilation	Input	RWC-	[1.1] DPT_Switch	1 Bit
552	Channel C warm air supply blocking object	Input	RWC-	[1.1] DPT_Switch	1 Bit
553	Channel C warm air supply inside temperature measurement value	Input	RWC-	[9.1] DPT_Value_Temp	2 Bytes
554	Channel C warm air supply Outside temperature measurement value	Input	RWC-	[9.1] DPT_Value_Temp	2 Bytes
555	Channel C warm air supply blocking target value	Input	RWC-	[9.1] DPT_Value_Temp	2 Bytes
556	Channel C inside temperature opening object	Input	R-CT	[1.1] DPT_Switch	1 Bit
557	Channel C inside temperature opening measurement value	Input	RWC-	[1.1] DPT_Switch	1 Bit
558	Channel C inside temperature opening target value	Input	RWC-	[9.1] DPT_Value_Temp	2 Bytes

No.	Name	Function	Flags	Data Point Type	Size
559	Channel C inside temperature opening threshold value	Input output	RWC-	[9.1] DPT_Value_Temp	2 Bytes
560	Channel C inside temperature opening object	Input	RWCT	[9.1] DPT_Value_Temp	2 Bytes
561	Channel C inside temperature opening threshold value 1 = +	Input	RWC-	[1] 1.xxx	1 Bit
562	Channel C inside temperature opening threshold value +	Input	RWC-	[1] 1.xxx	1 Bit
563	Channel C inside temperature opening threshold value -	Input	RWC-	[1] 1.xxx	1 Bit
564	Channel C inside temperature opening status	Output	R-CT	[1.1] DPT_Switch	1 Bit
565	Channel C inside humidity opening object	Input	RWC-	[1.1] DPT_Switch	1 Bit
566	Channel C inside humidity opening Measurement value	Input	RWC-	[9.7] DPT_Value_Humidity	2 Bytes
567	Channel C inside humidity opening status	Output	R-CT	[1.1] DPT_Switch	1 Bit
570	Channel C zero position reached	Input	RWC-	[1.1] DPT_Switch	1 Bit
571	Channel C zero position sensor malfunctioning	Output	R-CT	[1.1] DPT_Switch	1 Bit
572	Channel C master zero position status	Output	R-CT	[1.1] DPT_Switch	1 Bit
573	Channel C master zero position command	Output	R-CT	[1.1] DPT_Switch	1 Bit
574	Channel C slave zero position status	Input	RWC-	[1.1] DPT_Switch	1 Bit
575	Channel C master zero position status	Input	RWC-	[1.1] DPT_Switch	1 Bit
576	Channel C master zero position command	Input	RWC-	[1.1] DPT_Switch	1 Bit
577	Channel C slave zero position status	Output	R-CT	[1.1] DPT_Switch	1 Bit
578	Channel C drive moving	Output	R-CT	[1] 1.xxx	1 Bit
579	Channel C malfunctioning object	Output	R-CT	[1] 1.xxx	1 Bit
580	Channel C block 1 blocking object	Input	RWC-	[1.1] DPT_Switch	1 Bit

No.	Name	Function	Flags	Data Point Type	Size
581	Channel C block 1 wind blocking object	Input	RWC-	[1.1] DPT_Switch	1 Bit
582	Channel C block 1 wind blocking Measurement value	Input	RWC-	[9.5] DPT_Value_Wsp	2 Bytes
583	Channel C block 1 wind blocking status	Output	R-CT	[1.1] DPT_Switch	1 Bit
584	Channel C block 1 rain blocking object	Input	RWC-	[1.1] DPT_Switch	1 Bit
585	Channel C block 2 blocking object	Input	RWC-	[1.1] DPT_Switch	1 Bit
586	Channel C block 2 wind blocking object	Input	RWC-	[1.1] DPT_Switch	1 Bit
587	Channel C block 2 wind blocking Measurement value	Input	RWC-	[9.5] DPT_Value_Wsp	2 Bytes
588	Channel C block 2 wind blocking status	Output	R-CT	[1.1] DPT_Switch	1 Bit
589	Channel C block 2 rain blocking object	Input	RWC-	[1.1] DPT_Switch	1 Bit
590	Channel C block 3 blocking object	Input	RWC-	[1.1] DPT_Switch	1 Bit
591	Channel C block 3 wind blocking object	Input	RWC-	[1.1] DPT_Switch	1 Bit
592	Channel C block 3 wind blocking Measurement value	Input	RWC-	[9.5] DPT_Value_Wsp	2 Bytes
593	Channel C block 3 wind blocking status	Output	R-CT	[1.1] DPT_Switch	1 Bit
594	Channel C block 3 rain blocking object	Input	RWC-	[1.1] DPT_Switch	1 Bit
595	Channel C block 4 blocking object	Input	RWC-	[1.1] DPT_Switch	1 Bit
596	Channel C block 4 wind blocking object	Input	RWC-	[1.1] DPT_Switch	1 Bit
597	Channel C block 4 wind blocking Measurement value	Input	RWC-	[9.5] DPT_Value_Wsp	2 Bytes
598	Channel C block 4 wind blocking status	Output	R-CT	[1.1] DPT_Switch	1 Bit
599	Channel C block 4 rain blocking object	Input	RWC-	[1.1] DPT_Switch	1 Bit
600	Channel C block 5 blocking object	Input	RWC-	[1.1] DPT_Switch	1 Bit

No.	Name	Function	Flags	Data Point Type	Size
601	Channel C block 5 wind blocking object	Input	RWC-	[1.1] DPT_Switch	1 Bit
602	Channel C block 5 wind blocking Measurement value	Input	RWC-	[9.5] DPT_Value_Wsp	2 Bytes
603	Channel C block 5 wind blocking status	Output	R-CT	[1.1] DPT_Switch	1 Bit
604	Channel C block 5 rain blocking object	Input	RWC-	[1.1] DPT_Switch	1 Bit
605	Channel C - movement limitation 1 - blocking object	Input	RWC-	[1.1] DPT_Switch	1 Bit
606	Channel C - movement limitation 2- blocking object	Input	RWC-	[1.1] DPT_Switch	1 Bit
607	Channel C - Short time restriction	Input	RWC-	[1.1] DPT_Switch	1 Bit
610	Channel C1 switching	Input	RWC-	[1.1] DPT_Switch	1 Bit
611	Channel C1 feedback	Output	R-CT	[1.1] DPT_Switch	1 Bit
612	Channel C1 status	Readable	R-C-	[1.1] DPT_Switch	1 Bit
613	Channel C1 blocking object	Input	RWC-	[1.1] DPT_Switch	1 Bit
615	Channel C1 start stair case light function	Input	-WC-	[1.10] DPT_Start	1 Bit
616	Channel C1 start stop stair case light function	Input	RWC-	[1.10] DPT_Start	1 Bit
617	Channel C1 connection	Input	RWC-	[1.2] DPT_Bool	1 Bit
618	Channel C1 - Call up / saving scenes	Input	RWC-	[18.1] DPT_SceneControl	1 Byte
620	Channel C2 switching	Input	RWC-	[1.1] DPT_Switch	1 Bit
621	Channel C2 feedback	Output	R-CT	[1.1] DPT_Switch	1 Bit
622	Channel C2 status	Readable	R-C-	[1.1] DPT_Switch	1 Bit
623	Channel C2 blocking object	Input	RWC-	[1.1] DPT_Switch	1 Bit
625	Channel C2 start stair case light function	Input	-WC-	[1.10] DPT_Start	1 Bit
626	Channel C2 start stop stair case light function	Input	RWC-	[1.10] DPT_Start	1 Bit
627	Channel C2 connection	Input	RWC-	[1.2] DPT_Bool	1 Bit
628	Channel C2 - Call up / saving scenes	Input	RWC-	[18.1] DPT_SceneControl	1 Byte
All models					
649	Channel C local operation blocking object	Input	RWC-	[1.1] DPT_Switch	1 Bit
Only KNX S4-B10					
650-658	Input 7 (see input1)				

No.	Name	Function	Flags	Data Point Type	Size
660-668	input 8 (see input 1)				
700	Channel D status automatic or manual	Output	R-CT	[1] 1.xxx	1 Bit
701	Channel D manual long term	Input	RWC-	[1.8] DPT_UpDown	1 Bit
702	Channel D manual short term	Input	RWC-	[1.8] DPT_UpDown	1 Bit
703	Channel D manual movement position	Input	RWC-	[5.1] DPT_Scaling	1 Byte
704	Channel D manual slat position	Input	RWC-	[5.1] DPT_Scaling	1 Byte
705	Channel D automatic long term	Input	RWC-	[1.8] DPT_UpDown	1 Bit
706	Channel D automatic short term	Input	RWC-	[1.8] DPT_UpDown	1 Bit
707	Channel D automatic movement position	Input	RWC-	[5.1] DPT_Scaling	1 Byte
708	Channel D automatic slat position	Input	RWC-	[5.1] DPT_Scaling	1 Byte
709	Channel D switch from manual to automatic	Input	RWC-	[1] 1.xxx	1 Bit
710	Channel D automatic blocking object	Input	RWC-	[1.1] DPT_Switch	1 Bit
711	Channel D current movement position	Output	R-CT	[5.1] DPT_Scaling	1 Byte
712	Channel D current slat position	Output	R-CT	[5.1] DPT_Scaling	1 Byte
713	Channel D status object	Output	R-CT	[1] 1.xxx	1 Bit
714	Channel D - Approach position memory manually	Input	RWC-	[1.1] DPT_Switch	1 Bit
715	Channel D - Learn object 0 position memory manually	Input	RWC-	[1.1] DPT_Switch	1 Bit
716	Channel D - Learn object 1 position memory manually	Input	RWC-	[1.1] DPT_Switch	1 Bit
719	Channel D - Approach position memory automatically	Input	RWC-	[1.1] DPT_Switch	1 Bit
720	Channel D - Learn object 0 position memory automatically	Input	RWC-	[1.1] DPT_Switch	1 Bit
721	Channel D - Learn object 1 position memory automatically	Input	RWC-	[1.1] DPT_Switch	1 Bit

No.	Name	Function	Flags	Data Point Type	Size
724	Channel D call saving scenes	Input	RWC-	[18.1] DPT_SceneControl	1 Byte
725	Channel D outdoor temperature Blocking object	Input	RWC-	[1.1] DPT_Switch	1 Bit
726	Channel D outdoor temperature blocking measurement value	Input	RWC-	[9.1] DPT_Value_Temp	2 Bytes
727	Channel D outdoor temperature blocking status	Output	R-CT	[1.1] DPT_Switch	1 Bit
728	Channel D twilight object	Input	RWC-	[1.1] DPT_Switch	1 Bit
729	Channel D twilight measurement value	Input	RWC-	[9.4] DPT_Value_Lux	2 Bytes
730	Channel D twilight status	Output	R-CT	[1.1] DPT_Switch	1 Bit
731	Channel D time control	Input	RWC-	[1.1] DPT_Switch	1 Bit
732	Channel D inside temperature release object	Input	RWC-	[1.1] DPT_Switch	1 Bit
733	Channel D inside temperature release measurement value	Input	RWC-	[9.1] DPT_Value_Temp	2 Bytes
734	Channel D inside temperature release target value	Input	RWC-	[9.1] DPT_Value_Temp	2 Bytes
735	Channel D inside temperature release status	Output	R-CT	[1.1] DPT_Switch	1 Bit
736	Channel D shading object	Input	RWC-	[1.1] DPT_Switch	1 Bit
737	Channel D shading brightness Measurement value 1	Input	RWC-	[9.4] DPT_Value_Lux	2 Bytes
738	Channel D shading brightness Measurement value 2	Input	RWC-	[9.4] DPT_Value_Lux	2 Bytes
739	Channel D shading brightness Measurement value 3	Input	RWC-	[9.4] DPT_Value_Lux	2 Bytes
740	Channel D shading threshold value	Input output	RWCT	[9.4] DPT_Value_Lux	2 Bytes
741	Channel D shading threshold value1 = + | 0 = -	Input	RWC-	[1] 1.xxx	1 Bit
742	Channel D shading threshold value +	Input	RWC-	[1] 1.xxx	1 Bit
743	Channel D shading threshold value -	Input	RWC-	[1] 1.xxx	1 Bit
744	Channel D shading threshold value	output	R-CT	[1.1] DPT_Switch	1 Bit

No.	Name	Function	Flags	Data Point Type	Size
745	Channel D shading position Teaching object	Input	RWC-	[1] 1.xxx	1 Bit
746	Channel D azimuth	Input	RWC-	[9] 9.xxx	2 Bytes
747	Channel D elevation	Input	RWC-	[9] 9.xxx	2 Bytes
748	Channel D cold air supply blocking object	Input	RWC-	[1.1] DPT_Switch	1 Bit
749	Channel D cold air supply outside temperature measurement value	Input	RWC-	[9.1] DPT_Value_Temp	2 Bytes
750	Channel D cold air supply blocking status	Output	R-CT	[1.1] DPT_Switch	1 Bit
751	Channel D forced ventilation	Input	RWC-	[1.1] DPT_Switch	1 Bit
752	Channel D warm air supply blocking object	Input	RWC-	[1.1] DPT_Switch	1 Bit
753	Channel D warm air supply inside temperature measurement value	Input	RWC-	[9.1] DPT_Value_Temp	2 Bytes
754	Channel D warm air supply outside temperature measurement value	Input	RWC-	[9.1] DPT_Value_Temp	2 Bytes
755	Channel D warm air supply blocking target value	Input	RWC-	[9.1] DPT_Value_Temp	2 Bytes
756	Channel D warm air supply blocking status	Output	R-CT	[1.1] DPT_Switch	1 Bit
757	Channel D inside temperature opening object	Input	RWC-	[1.1] DPT_Switch	1 Bit
758	Channel D inside temperature opening measurement value	Input	RWC-	[9.1] DPT_Value_Temp	2 Bytes
759	Channel D inside temperature opening target value	Input	RWC-	[9.1] DPT_Value_Temp	2 Bytes
760	Channel D inside temperature opening threshold value	Input output	RWCT	[9.1] DPT_Value_Temp	2 Bytes
761	Channel D inside temperature opening threshold value 1 = +	Input	RWC-	[1] 1.xxx	1 Bit
762	Channel D inside temperature opening threshold value +	Input	RWC-	[1] 1.xxx	1 Bit
763	Channel D inside temperature opening threshold value -	Input	RWC-	[1] 1.xxx	1 Bit

No.	Name	Function	Flags	Data Point Type	Size
764	Channel D inside temperature opening status	Output	R-CT	[1.1] DPT_Switch	1 Bit
765	Channel D inside humidity opening object	Input	RWC-	[1.1] DPT_Switch	1 Bit
766	Channel D inside humidity opening Measurement value	Input	RWC-	[9.7] DPT_Value_Humidity	2 Bytes
767	Channel D inside humidity opening status	Output	R-CT	[1.1] DPT_Switch	1 Bit
770	Channel D zero position reached	Input	RWC-	[1.1] DPT_Switch	1 Bit
771	Channel D zero position sensor malfunctioning	Output	R-CT	[1.1] DPT_Switch	1 Bit
772	Channel D master zero position status	Output	R-CT	[1.1] DPT_Switch	1 Bit
773	Channel D master zero position command	Output	R-CT	[1.1] DPT_Switch	1 Bit
774	Channel D slave zero position status	Input	RWC-	[1.1] DPT_Switch	1 Bit
775	Channel D master zero position status	Input	RWC-	[1.1] DPT_Switch	1 Bit
776	Channel D master zero position command	Input	RWC-	[1.1] DPT_Switch	1 Bit
777	Channel D slave zero position status	Output	R-CT	[1.1] DPT_Switch	1 Bit
778	Channel D drive moving	Output	R-CT	[1] 1.xxx	1 Bit
779	Channel D malfunctioning object	Output	R-CT	[1] 1.xxx	1 Bit
780	Channel D block 1 blocking object	Input	RWC-	[1.1] DPT_Switch	1 Bit
781	Channel D block 1 wind blocking object	Input	RWC-	[1.1] DPT_Switch	1 Bit
782	Channel D block 1 wind blocking measurement value	Input	RWC-	[9.5] DPT_Value_Wsp	2 Bytes
783	Channel D block 1 wind blocking status	Output	R-CT	[1.1] DPT_Switch	1 Bit
784	Channel D block 1 rain blocking object	Input	RWC-	[1.1] DPT_Switch	1 Bit
785	Channel D block 2 blocking object	Input	RWC-	[1.1] DPT_Switch	1 Bit
786	Channel D block 2 wind blocking object	Input	RWC-	[1.1] DPT_Switch	1 Bit

No.	Name	Function	Flags	Data Point Type	Size
787	Channel D block 2 wind blocking measurement value	Input	RWC-	[9.5] DPT_Value_Wsp	2 Bytes
788	Channel D block 2 wind blocking status	Output	R-CT	[1.1] DPT_Switch	1 Bit
789	Channel D block 2 rain blocking object	Input	RWC-	[1.1] DPT_Switch	1 Bit
790	Channel D block 3 blocking object	Input	RWC-	[1.1] DPT_Switch	1 Bit
791	Channel D block 3 wind blocking object	Input	RWC-	[1.1] DPT_Switch	1 Bit
792	Channel D block 3 wind blocking measurement value	Input	RWC-	[9.5] DPT_Value_Wsp	2 Bytes
793	Channel D block 3 wind blocking status	Output	R-CT	[1.1] DPT_Switch	1 Bit
794	Channel D block 3 rain blocking object	Input	RWC-	[1.1] DPT_Switch	1 Bit
795	Channel D block 4 blocking object	Input	RWC-	[1.1] DPT_Switch	1 Bit
796	Channel D block 4 wind blocking object	Input	RWC-	[1.1] DPT_Switch	1 Bit
797	Channel D block 4 wind blocking measurement value	Input	RWC-	[9.5] DPT_Value_Wsp	2 Bytes
798	Channel D block 4 wind blocking status	Output	R-CT	[1.1] DPT_Switch	1 Bit
799	Channel D block 4 rain blocking object	Input	RWC-	[1.1] DPT_Switch	1 Bit
800	Channel D block 5 blocking object	Input	RWC-	[1.1] DPT_Switch	1 Bit
801	Channel D block 5 wind blocking object	Input	RWC-	[1.1] DPT_Switch	1 Bit
802	Channel D block 5 wind blocking measurement value	Input	RWC-	[9.5] DPT_Value_Wsp	2 Bytes
803	Channel D block 5 wind blocking status	Output	R-CT	[1.1] DPT_Switch	1 Bit
804	Channel D block 5 rain blocking object	Input	RWC-	[1.1] DPT_Switch	1 Bit
805	Channel D - Movement limitation 1 - blocking object	Input	RWC-	[1.1] DPT_Switch	1 Bit
806	Channel D - Movement limitation 2 - blocking object	Input	RWC-	[1.1] DPT_Switch	1 Bit

No.	Name	Function	Flags	Data Point Type	Size
807	Channel D - Short time restriction	Input	RWC-	[1.1] DPT_Switch	1 Bit
810	Channel D1 switching	Input	RWC-	[1.1] DPT_Switch	1 Bit
811	Channel D1 feedback	Output	R-CT	[1.1] DPT_Switch	1 Bit
812	Channel D1 status	Readable	R-C-	[1.1] DPT_Switch	1 Bit
813	Channel D1 blocking object	Input	RWC-	[1.1] DPT_Switch	1 Bit
815	Channel D1 start stair case light function	Input	-WC-	[1.10] DPT_Start	1 Bit
816	Channel D1 start stop stair case light function	Input	RWC-	[1.10] DPT_Start	1 Bit
817	Channel D1 connection	Input	RWC-	[1.2] DPT_Bool	1 Bit
818	Channel D1 - Call up / saving scenes	Input	RWC-	[18.1] DPT_SceneControl	1 Byte
820	Channel D2 switching	Input	RWC-	[1.1] DPT_Switch	1 Bit
821	Channel D2 feedback	Output	R-CT	[1.1] DPT_Switch	1 Bit
822	Channel D2 status	Readable	R-C-	[1.1] DPT_Switch	1 Bit
823	Channel D2 blocking object	Input	RWC-	[1.1] DPT_Switch	1 Bit
825	Channel D2 start stair case light function	Input	-WC-	[1.10] DPT_Start	1 Bit
826	Channel D2 start stop stair case light function	Input	RWC-	[1.10] DPT_Start	1 Bit
827	Channel D2 connection	Input	RWC-	[1.2] DPT_Bool	1 Bit
828	Channel D2 - Call up / saving scenes	Input	RWC-	[18.1] DPT_SceneControl	1 Byte
All models					
849	Channel D local operation blocking object	Input	RWC-	[1.1] DPT_Switch	1 Bit
Only KNX S4-B10					
850-858	Input 9 (see input 1)				
860-868	Input 10 (see input 1)				

4. Parameter setting

The default settings of the parameter are labelled by an underscore.

4.1. General settings

First set the general parameters for the bus communication (telegram rate, transmission delay). Additionally, you can indicate if for the programming of scenes all, or only the changed settings are applied to the bus.

Maximum telegram rate	1 • 2 • 5 • 10 • 20 telegrams per second
Send delay of threshold values after voltage returns	5 s ... 2 h
Send delay of switching and status outputs after voltage returns	5 s ... 2 h
For the use of scenes:	
Application when programming	all parameters • only changed parameters

4.1.1. Local operation

The Up/Down buttons on the device are firmly assigned to the channels A-D. For blocking manual operation, blocking objects can be set for the button pairs (communication objects "Channel X local operation blocking object").

Local button Channel A Use blocking object	No • Yes
Local button Channel B Use blocking object	No • Yes
Local button Channel C Use blocking object	No • Yes
Local button Channel D Use blocking object	No • Yes

Note: If monitoring periods or movement range limits are used, operation via the local buttons is not possible in case of a bus voltage supply failure.

4.2. Inputs

Only for S4-B10 230 V and KNX S2-B6 230 V. For KNX S1-B2, button inputs are directly parametrized in the settings of the output channels.

Set the parameters for inputs 1 and 2 of KNX S4-B10 and KNX S2-B6. The additional inputs are designated by default for operating the devices on the outputs (channels A-D), and are therefore parameterized directly in the settings of the output channels (see *Scenes (drives)*, page 64) or (see *Button input (switch functions)*, page 68).

Configuration options for inputs:

KNX S4-B10	KNX S2-B6	KNX S1-B2	
Input 1	Input 1	–	• Bus button
Input 2	Input 2	–	• Bus button
Input 3	Input 3	Input 1	• Actuator button for output channel A • Bus button • For drives also zero position sensor
Input 4	Input 4	Input 2	• Actuator button for output channel A • Bus button
Input 5	Input 5	–	• Actuator button for output channel B • Bus button • For drives also zero position sensor
Input 6	Input 6	–	• Actuator button for output channel B • Bus button
Input 7	–	–	• Actuator button for output channel C • Bus button • For drives also zero position sensor
Input 8	–	–	• Actuator button for output channel C • Bus button
Input 9	–	–	• Actuator button for output channel D • Bus button • For drives also zero position sensor
Input 10	–	–	• Actuator button for output channel D • Bus button

Operating mode	
Use input 1	No • as bus button
Use input 2	No • as bus button
Use input 3 and 4	See parameterization channel A – button inputs
Use input 5 and 6	See parameterization channel B – button inputs
Use input 7 and 8	See parameterization channel C – button inputs
Use input 9 and 10	See parameterization channel D – button inputs

Input as bus button

If an input is used as a free bus button, it will send a previously set value to the bus when activated. In the program file of the actuator different parameters are integrated for frequently needed bus functions. Thus, the inputs can easily be configured as a switch, drive control, dimmer for sending values and for the scene calls.

Bus function	• Switch • Selector switch • Shutter • Blind • Awning • Window • Dimmer • 8 bit encoder • Temperature encoder • Brightness encoder • Scenes

Input as switch:

If a button with switch function is assigned to the input, select the bus function "Switch" and specify which value is sent when pressing/releasing the button and when it will be sent.

Function	**Switch**
Command when pressing the button	• send 0 • send 1 • do not send telegram
Command when releasing the button	• send 0 • send 1 • do not send telegram
Send value	• no change • for change to 1 • for change to 0 • for change and cyclical • for change to 1 and cyclical • for change to 0 and cyclical
Cycle *(if sent cyclical)*	5 s • 10 s • 30 s • 1 min • 2 min • 5 min • 10 min • 20 min • 30 min • 1 h • 2 h

The input can be blocked using a blocking object. Set what is transmitted to the bus when (de)activating blocking.
For active blocking there is *no* cyclical transmission.

Use blocking object	No • **Yes**
Once when activating the blocking	• send 0 • send 1 • do not send telegram
Once when deactivating the blocking	• send 0 • send 1 • do not send telegram • send current state

Input as changeover switch:

If a button with switch function is assigned to the input, select the bus function "Changeover Switch" and specify if the button should switch when pressed/released.

Function	**Changeover Switch**
Command when pressing the button	• Switching • do not send telegram
Command when releasing the button	• Switching • do not send telegram

The input can be blocked using a blocking object. For active blocking there is *no bus communication*.

Use blocking object	No • Yes

Input to shutter, blinds, awning or window control:

If the input to the drive control is used via the bus, select the bus function "shutter", "awning", "blinds" or "window" and specify the button function and control mode.

Function	**Shutter / blinds / awning / window**	
Button function	Up • Down Up • Down • Up/Down On • Off • On/Off Open • Closed • Open/Closed	(shutter) (blinds) (awning) (window)
Control mode*	• Standard • Standard inverted • Comfort mode • Dead man's switch	

*A detailed description of the setting options for the individual control modi can be found in the general part of chapter *Control modi for drive control*, page 70.

The input can be blocked using a blocking object. For active blocking there is *no bus communication*.

Use blocking object	No • Yes

Input as dimmer:

If the input is used as a dimmer, select the bus function "Dimmer" and specify the button function, time interval (switching/dimming) and if requested, the repeat interval for a long button press.

Function	**Dimmer**
Button function	brighter • darker • brighter/darker
Time between switching and dimming (in 0.1 s)	1...50; 5

Repeat the dimm command	no • yes
Repeat the dimm command for a long button press *(if dimm command is repeated)*	every 0.1 s • every 2 sec; every 0,5 sec
Dim by *(if dimm command is repeated)*	1,50% • 3% • 6 % • 12,50% • 25% • 50%

The input can be blocked using a blocking object. For active blocking there is *no bus communication*.

Use blocking object	No • Yes

Input 8 bit encoder:

If the input is to be used as an 8bit encoder, select the "8 bit encoder" bus function and specify which value will be sent.

Function	**8 bit encoder**
Value	0...255

The input can be blocked using a blocking object. For active blocking there is *no bus communication*.

Use blocking object	No • Yes

Input as temperature encoder:

If the input is used as a temperature encoder, then choose the bus function "Temperature encoder" and specify which value between -30°C and +80°C will be sent.
By sending a temperature value, the target value of the temperature control may be changed for example.

Function	**Temperature encoder**
Temperature in 0.1°C	-300...800; 200

The input can be blocked using a blocking object. For active blocking there is *no bus communication*.

Use blocking object	No • Yes

Input as brightness encoder:

If the input is assigned and shall be used as a brightness encoder (e.g. threshold value of a sun sensor), select "brightness encoder" and specify which value will be sent.

Function	**Brightness encoder**
Brightness in klux	0...100; 20

The input can be blocked using a blocking object. For active blocking there is *no bus communication*.

Use blocking object	No • Yes

Input for scene control:

If scenes are called and saved with the input, then choose the "Scenes" bus function and specify the saving, time difference (call/save) and scene number.

Function	**Scenes**
Button operation	• without saving • with saving
Time between calling and saving in 0.1 seconds *(only if selected "with saving")*	1...50; 10
Scene No.	0...127

The input can be blocked using a blocking object. For active blocking there is *no bus communication*.

Use blocking object	No • Yes

4.3. Outputs

State here what is connected to the individual output channels.

Operating mode	
Channel A / B / C / D controls	• shutter • blind • awning • window • double switch function

Thereafter, the setting options for the individual outputs will appear:

Settings for drives (channel A, B, C, D):

- General specifications for the connected drive
  (see *Channel settings – drives*, page 45)
- Control functions: Movement range limit, blocking, type of automatic
  (see *Control (drives)*, page 47)
- Automatic functions: Automatic can be specified externally or internally
  (see *Automatic - internal for shading (drives)*, page 55 or *Automatic for windows (drives)*, page 60)
- Scenes: Movement positions (see *Scenes (drives)*, page 64)
- Button inputs: Configuration as actuator button, bust button or for zero position sensor (see *Button inputs (drives)*, page 64)

Settings for switch functions
(Channels are divided into two switches A1|A2, B1|B2, C1|C2, D1|D2):

- General specifications for the switch function
  (see *Channel settings – switch functions*, page 65)
- Connecting different communication objects
  (see *Connection (switch functions)*, page 66)

- On/Off switch delays or time switching
  (see *On/Off switch delays, time switching (switch functions)*, page 66)
- Block function(see *Blocking function (switch functions)*, page 67)
- Button input: Configuration as actuator button or bus button
  (see *Button input (switch functions)*, page 68)

4.3.1. Channel settings – drives

If a drive is connected to the output channel, set first the general specifications for the drive.

Driving direction:
Up/down, on/off or open/close can be exchanged.

Exchange UP/DOWN *(shutter, blinds)* Exchange ON/OFF *(awning)* Exchange OPEN/CLOSE *(window)*	no • yes

Runtime:
The runtime between the end positions is the basis for moving into intermediate positions (e.g. for movement range limits and scenes). You can enter the runtime numerically (in seconds) or have the runtime determined automatically. The actuator specifies the end positions with help from the greater current on the drive output. For this, regular reference movements (see below) should be set.

Use an automatic runtime measurement	no • yes

Use an automatic runtime measurement	**no**
Runtime DOWN in sec *(shutter, blinds)* Runtime OFF in sec *(awning)* Runtime UP in sec *(window)*	1 ... 320; 60
Runtime OPEN in sec *(shutter, blinds)* Runtime ON in sec *(awning)* Runtime CLOSE in sec *(window)*	1 ... 320; 65

If a dead time is observed while starting the curtain, then this can be entered manually at this point or calculated automatically. Obey the manufacturer's instructions for the curtain.

Use dead times	• no • yes, enter by hand • yes, calculate automatically
during the position travel from closed position in 10 ms *(only for manual input)*	0 ... 600
for position movement from all other positions in 10 ms *(only for manual input)*	0 ... 600
for slat movement from closed position in 10 ms *(only for manual input)*	0 ... 600

for movement with change of direction in 10 ms *(only for manual input)*	0 ... 600
for slat movement from all other positions in 10 ms *(only for manual input)*	0 ... 600

Runtime zero position and step setting of slats:
(only for shutters)
Through the runtime in which the drive continues moving in the zero position (i.e. after reaching the top end position), different curtain lengths or assembly positions of the end position switch may be balanced. The shading of a facade is completely retracted by adjusting the zero position runtimes, and thus provides a better overall image.
Step time x step number determines the turning time of the slats.

Runtime zero position in 0.1 sec	0 ... 255
Step time in 10 ms	1 ... 100; 20
Step number slats	1 ... 255; 5

If the short time command for shutters (step command) is used only for slat adjustment, but not for positioning the curtain, the following parameter is set to "Yes". The parameter appears only for shutters.

Allow step commands only for slat adjustment	no • yes

Break time:
The required break times during a change of direction of the drive should be adjusted according to the specifications of the motor manufacturer.

Break time for a change of direction in 0.1 sec	5 ... 100; 10

Reference movement:
With the regular movement to the two end positions, the runtime and zero position are adjusted again. This is especially important for the automatic runtime determination. Therefore, it can be set here after how many movements before a positioning movement a reference movement will be performed. The reference movement is always in the direction of the secure position (retracting when shading, closing windows).

Perform a reference movement	no • yes

Perform a reference movement	**yes**
for more than movements before an auto positioning movement	1 ... 255; 10

Slat turning:
(only for shutters)
The slat turning should be adjusted according to the specifications of the motor manufacturer.

Turn slats	• never • only after positioning movement • after each movement

Status object and drive position:
The status and current position can be sent to the bus. By sending of 1, the status object indicates that the retracted or closed position has been exited and it is suitable for example for monitoring windows.
The exact drive position can be sent on the bus if required. The variable delay ensures that the bus is not blocked by too many data packets during a longer movement. The position can also be transmitted cyclically.

Use status object	no • yes
Use drive position feedback	no • yes
Position transmit delay after change in 0.1 s *(only for feedback)*	0...50; 10
Transmit drive position cyclically *(only for feedback)*	no • 5 s • 10 s • ... • 2 h

Scenes:
Here the scene menu is activated for this output channel.

Use scenes	no • yes

See *Scenes:*, page 47.

4.3.1.1. Control (drives)

Set the behaviour of the drive here.

Movement range limit:

The operating range limit is used in order to avoid that two units collide with each other (e.g. an awning and a window which is about to open).

One of two drive mechanisms is prioritised and is parameterised as master and the other one as slave. By means of zero position sensors, both actuators know the own current status and the current status of the other one. This one is either “in a safe position“ or “not in a safe position“. The safe position is reached as soon as the drive mechanism is in a sector where a collision is not possible (for an awning, for example, this might be an extension of 0 to 30%). In order to report the safe position of the drive mechanism, either a zero position sensor (e.g. final position switch or light barrier) may be connected at an input of the actuator, or the actuator receives the message of its zero position sensor by the bus (see graphic in chapter *Connection options for zero position sensors* in the general part).

Before the drive mechanism of the master actuator is moved, the slave actuator receives the command to move its drive mechanism to the safe position. As a consequence, the slave remains in safe position or it moves back if it is not within the safe range.

The master actuator knows from the communication object „Slave zero position status" whether the drive mechanism connected to the slave actuator is already in a safe position (then the master moves immediately) or not (then the master waits). Only if the master actuator is informed that the slave drive mechanism is in a safe position, it moves its drive mechanism beyond its own safe position.

Example:

The ventilation with the window shall take priority over the shading with the awning. Therefore, the window is parameterised as master, the awning as slave. Both are provided with a zero position sensor which reports whether the drive mechanism is in a safe position or not.

The awning is now extended and the window shall be opened. The window knows the status of the awning ("not safe position") and therefore submits a master command to the awning. This is the signal for the awning, to retract a little bit. As soon as the awning has reached a safe position, there is an according feedback signal of the zero position sensor of the awning. Only now the window opens.

Master and slave regularly exchange their positions ("safe" or "not safe"). By means of the monitoring period, you may adjust the frequency of information retrieval. The selected period should be shorter than the period which the monitored drive mechanism needs to travel from the limit of the safe range (last reported safe position) to a position where there is risk of collision.

If the drive mechanism does not receive a master/slave or zero position object, it moves to the safe position. The same holds true for a bus voltage breakdown or for a malfunction message from the zero position sensor (is valid for the parameterisation as master and as slave).

Without movement range limitation:

Use movement range limit	**no**
Behaviour following a failure of the bus power supply	• no action • Stop • Up command (or On/Down) • Down command (or Off/Up)
Behaviour on bus voltage restoration and after programming	• no action • Up command (or On/Down) • Down command (or Off/Up)

With movement range limit:
Set if the zero position sensor of the drive is directly connected to the actuator (input channel) or if the zero position is received via the bus (communication object).

Use movement range limit	**yes**
Zero position sensor connected as	• communication object • input channel
Actuator is	master • slave

Actuator as master:

Actuator is	**master**
Send repetition for master command in sec	1 ... 255; 10
Monitoring period for slave status (and zero position) object in sec	1 ... 255; 10

Actuator as slave:

Actuator is	**slave**
Send repetition for slave commands in sec	1 ... 255; 10
Monitoring period for master status (and zero position) object in sec	1 ... 255; 10
Movement position for slave in % if input "Master zero position command" = 1	0 ... 100

Reference travel direction:

If the travel range is limited, the direction of the reference travel is fixed (safe position). The direction can be set without limiting the travel range.

Direction of reference travel	• in safe position • in closed position *(move out shading)* • in open position *(window)* • shortest route

Blocking objects:
The output channel can be blocked in case of rain, wind or other events. The manual operation is then not possible. Blocking and monitoring are configured here first. For setting the individual blocks, separate menu items "Blocking X" will appear (see chapter *Block – blocking objects*, page 51, *Block – wind blocking*, page 52 and *Block – rain blocking*, page 53).
The priorities of the blocking objects correspond to the sequence listed (Block 1 has the highest priority, Block 5 the lowest).

Use Block 1 (high priority)	• no • yes, with blocking object • yes, as wind blocking • yes, as rain blocking

Use block 2	• no • yes, with blocking object • yes, as wind blocking • yes, as rain blocking
Use block 3	• no • yes, with blocking object • yes, as wind blocking • yes, as rain blocking
Use block 4	• no • yes, with blocking object • yes, as wind blocking • yes, as rain blocking
Use Block 5 (low priority)	• no • yes, with blocking object • yes, as wind blocking • yes, as rain blocking
Priority is	• Block 5 over Manual • Manual over Block 5
Use monitoring of blocking objects	No • Yes
Monitoring period for blocking objects *(only if using monitoring of the blocking objects)*	5s... • 2 h; 5 min
Behaviour if a blocking object is not received *(only if blocking object monitoring is used)*	• Stop • Up command • Down command *(Shutters/roller blinds)* • On command • Off command *(Awnings)* • Close command • Open command *(Windows)*

Use movement limit 1/2:

The movement limits are activated here, and can them be configured in their own menu items. See 'Movement limits' on Page 30.

Short time restriction (for blinds):
If short time restriction is active, only short time movement commands are still possible manually. If the function "Allow step commands only for blind adjustment" is activated simultaneously, (see *Channel settings – drives*, page 45) only the slats can still be adjusted by hand but no longer the movement position of the shutter.
Restriction is active for object value 1.

Use short time limit	no • yes
Value of the object in front of 1. communication and bus voltage restoration *(if short time restriction is used)*	0 • 1

Automatic reset:
With the manual operation the automatic of the drive is deactivated. Here it is set when the automatic is reactivated.

Manual switches to automatic after	• expiry of a waiting period • reception of an object • expiration of a waiting period or receipt of an object
Waiting period in min *(if "Expiration of a waiting period" was chosen)*	1...255; 20
Switch to automatic for an object value *(if "Receipt of an object" was chosen)*	0 • 1 • 0 or 1

Automatic blocking object:
With the automatic blocking object, the automatic can be deactivated for a short term (e.g. if present or during speeches in conference rooms).
Here it is also specified in which mode the channel is found when the voltage returns, i.e. after a power failure. The mode (manual or automatic) is send as a status object to the bus.

Use automatic blocking object	no • yes
Operating mode after power returns	• Automatic • Manual
Send status object	• 1 for automatic | 0 for manual • 0 for automatic | 1 for manual
Send delay of the status output Automatic or Manual in 0.1 sec	0...50

Type of automatic:
The automatic for the connected drive can be specified externally, however all the settings can also be configured internally. If "internal automatic" is chosen, a separate menu item "Automatic" (see chapter *Movement limits*, page 54 or *Automatic for windows (drives)*, page 60) appears.

Type of automatic	external automatic • internal automatic

Block – blocking objects

The menu item only appears if a block with blocking object was configured for "control". Here it is specified was happens for object value 1 and 0. Via the free blocking object, a fire alarm scenario may be configured for example (create escape routes by retracting the shading, smoke extraction via windows). This can prevent being locked out on the patio (opened window contact of the patio door blocks the shutter in front of the door).

Designation	[Block 1 ... 5] Enter a designation here!
If blocking object has value =1	• no action • stop • move into position • up-command • down-command *(shutter/blind)* • retract-command • extend-command *(awning)* • close-command • open-command *(window)*
Position in % (only if by using a block, a specific position is achieved)	0...100
Slat position in % (only if by using a block, a specific shutter position is achieved)	0...100
If blocking object has value =0	
For manual operation before and after blocking	• no action • move into last position
For automatic operation after blocking	follow automatic
Value of the object before the 1st communication and bus voltage return	0...1

Block – wind blocking

The menu item only appears if a wind blocking was configured for "control". The input object "wind blocking" is linked with the output object of a wind sensor. The input can be a 1bit object (smaller or larger than a threshold value), as well as a 16bit object (measurement value).

Designation	[Wind blocking] Enter a designation here!
Type of input object	1 bit • 16 bit

1 bit input object:

Type of input object	**1 bit**
If blocking object has value =1	• no action • stop • move into position • up-command • down-command *(shutter/blind)* • retract-command • extend-command *(awning)* • close-command • open-command *(window)*
Position in % (only if by using a block, a specific position is achieved)	0...100

Slat position in % (only if by using a block, a specific shutter position is achieved)	0...100
Waiting period in secure position in min after blocking	1...255; 5
Behaviour after waiting period	
For manual operation before and after blocking	• no action • move into last position
For automatic operation after blocking	follow automatic

16 bit input object:

Type of input object	**16 bit**
As of wind speed in m/s blocking	2...30; 5
If blocking is active	• no action • stop • move into position • up-command • down-command *(shutter/blind)* • retract-command • extend-command *(awning)* • close-command • open-command *(window)*
Waiting period in secure position in min after blocking	1...255; 5
Behaviour after waiting period	
For manual operation before and after blocking	• no action • move into last position
For automatic operation after blocking	follow automatic
Send current blocking status	no • yes

Block – rain blocking

The menu item only appears if a rain blocking was configured for "control". The input object "rain blocking" is linked with the output object of a rain sensor.

Designation	[rain blocking] Enter a designation here!
If blocking object has value =1	• no action • stop • move into position • up-command • down-command *(shutter/blind)* • retract-command • extend-command *(awning)* • close-command • open-command *(window)*

Position in % (only if by using a block, a specific position is achieved)	0...100
Slat position in % (only if by using a block, a specific shutter position is achieved)	0...100
Waiting period in secure position in min after blocking	1...255; 5
Behaviour after waiting period	
For manual operation before and after blocking	• no action • move into last position
For automatic operation after blocking	follow automatic

Movement limits

The menu item appears only if a movement limit was activated in 'Control'. Movement limits can be used to restrict manual movement. The limit is active for object value 1

Limitation type	• full • movement position • slat angle (for shutters) • allow UP only • allow DOWN only
Value of the object in front of 1. Communication and bus voltage restoration	0 • 1

If limiting the movement position:

Limitation type	• movement position
Movement allowed in the position range	
from (in %)	0...100
to (in %)	0...100

If limiting the slat angle (shutters only):

Limitation type	• slat angle
Movement allowed in the angle range	
from (in %)	0...100
to (in %)	0...100

4.3.1.2. Manual

Position memory for the manual movement can be activated here. The position set here can be overwritten via a learning object at any time. The memorised position can be retrieved again at a later time.

For shutters, both the movement and the slat position can be stored.

Use position memory	no • yes

Use different positions for object values 0 and 1	no • yes (if 'yes' is selected, there will be a division into positions for object value 0 and object value 1)
Position in %	0...100
Allow calling via command sequence: long-term = 1, short-term = 1	no • yes
Use learning object for new position	no • yes
Transfer when programming (when learning object is used)	• all parameters • changed parameters only

4.3.1.3. Automation - external

The 'External automation' menu item appears if the external automation is selected in 'Control'. In this case, the position memory can be activated for the automatic movement. The position set here can be overwritten via a learning object at any time. The memorised position can be retrieved again at a later time. For configuration options, see Chapter 'Manual' on Page 31.

4.3.1.4. Automatic - internal for shading (drives)

The menu item "Automatic internal" appears if internal automatic is selected for "control". The internal automatic functions take into account the brightness/position of the sun, outdoor and indoor temperature and allow a time and dimming control. A shading position can be specified or taught.

To be able to fully utilize the internal shading automatic, information about brightness/twilight, outdoor and indoor temperature, time and position of the sun must be present in the bus system.

Outdoor temperature block:

The input object "outdoor temperature block" is linked with the output object of a temperature sensor. The input object can be a 1bit object (smaller or larger than a threshold value), as well as a 16bit object (measurement value).

Use automatic blocking object	no • yes

Use automatic blocking object	**yes**
Type of temperature input object	1 bit • 16 bit

1 bit input object:

Type of temperature input object	**1 bit**

Shading is allowed if the bit is 0 and blocked if the bit is 1.

16 bit input object:

Type of temperature input object	**16 bit**
Threshold value in 0.1°C	-300 ... 800; 50

Hysteresis in 0.1°C	1 ... 100; 20
Send current blocking status	no • yes

Shading is allowed
if the measurement value is larger than the threshold value+hysteresis
and blocked
if the measurement value is smaller than or equal to the threshold value.

Twilight/time control:

The time control is provided via a communication object. The input object "twilight control" is linked with the output object of a brightness sensor. A 1bit object (smaller or larger than a threshold value), as well as a 16bit object (measurement value) can be used for the twilight control.

Use twilight/time control	• no • only twilight control • only time control • both (OR linking)

Use twilight/time control	**only twilight control / both**
Type of twilight object	1 bit • 16 bit

16 bit input object:

Type of twilight object	**16 bit**
Twilight threshold value in lux	1 ... 1000; 10
Switching delay	1 minute
Send current twilight status	no • yes

Indoor temperature release:

The input object "indoor temperature release" is linked with the output object of a temperature sensor. The input object can be a 1bit object (smaller or larger than a threshold value), as well as a 16bit object (measurement value or target and actual value).

Use inside temperature release	no • yes

Type of input object	1 bit • 16 bit • 16 bit target/actual temperature

16 bit input object:

Type of input object	**16 bit**
Threshold value in 0.1°C	-300 ... 800; 200
Hysteresis in 0.1°C	1 ... 100; 20
Send current blocking status	no • yes

16 bit input object (target/actual temperature):
For this function the target value and actual value (measurement values) are imported from the 16bit object and evaluated.

Type of input object	**16 bit target/actual temperature**
Target value (SW) – actual value (MW) Difference in 0.1°C	1 ... 100; 20
Hysteresis in 0.1°C	1 ... 100; 20
Send current blocking status	no • yes

Shading is allowed if the measurement value is greater than or equal to the target value+difference
and blocked if the measurement value is smaller than the target value+hysteresis difference.

Automatic shading:

The automatic shading evaluates the input objects "brightness" and "position of the sun" of a weather station. The moving position for the automatic shading is specified here as well.

Use automatic shading	no • yes

Brightness:

For controlling brightness, a 1bit object (smaller or larger than a threshold value), as well as two or three 16bit objects (measurement values, e.g. East, South and West sun) can be used.

Type of shading input	1 x 1 bit • 1 x 16 bit • 2 x 16 bit • 3 x 16 bit

1 x 1 bit input object:
Set the delay times for shading (prevents constant opening and closing when light conditions change quickly).

Type of shading input	**1 x 1 bit**
Drive up delay in min	0 ... 255; 12
Departure delay in min	0 ... 30; 1

1 x 16 bit, 2 x 16 bit or 3 x 16 bit as an input object:
The brightness threshold value can be specified per parameter or communication object. For several brightness measurement values (2 x 16 bit or 3 x 16 bit) only the maximum brightness value is compared to the threshold value.

Type of shading input	**1 x 16 bit • 2 x 16 bit • 3 x 16 bit**
Shading threshold specification per	parameter • communication object

Threshold value per parameter:
Set the threshold value and delay times for shading (prevents constant opening and closing when light conditions change quickly).

Shading threshold specification per	**Parameter**
Shading threshold value in klux	0 ... 100; 30
Drive up delay in min	0 ... 255; 12
Drive down delay in min	0 ... 30; 1
Send current shading status	No • Yes

Threshold value per communication object:
The threshold value is received via the communication object and can be changed additionally (e.g. button for "more sensitive" and "less sensitive"). Set the delay times for shading here (prevents constant opening and closing when light conditions change quickly).

Shading threshold specification per	**communication object**
The value communicated last shall be retained	• not • after voltage returns • after voltage returns and programming
Start threshold value in klux valid until 1st communication	0 ... 100; 30
Type of limit value change	• Absolute value with a 16bit comm. object • Lifting/lowering with a comm. object • Lifting/lowering with two comm. objects
Increments in klux *(only when "lifting/lowering with comm. object")*	1 ... 5; 2
Drive up delay in min	0 ... 255; 12
Drive down delay in min	0 ... 30; 1
Send current shading status	no • yes

Position of the sun:

Assess position of the sun	no • yes

Assess position of the sun	**yes**
Position of the sun is defined via	• Discreet value of azimuth and elevation • Directions (regarding azimuth and elevation)

Defining position of sun via values:
Enter the range (direction and height) in which the sun must be located for the shading to be active.

Position of the sun is defined via	**discreet value of azimuth and elevation**
Azimuth from	0 ... 360

Azimuth to	0 ... 360
Elevation from	0 ... 90
Elevation to	0 ... 90

Defining position of the sun via directions:
Enter the direction in which the sun must be positioned so that the shading is active.

Position of the sun is defined via	**directions (regarding azimuth and elevation)**
Directions	• East (azimuth: 0° ... 180°) • South east (azimuth: 45° ... 225°) • South (azimuth: 90° ... 270°) • South west (azimuth: 135° ... 315°) • West (azimuth: 180° ... 360°)

Slats and moving position (for shutters):

For shutters the angle of the slats can be firmly set, or the slats can automatically follow the elevation. This rule applies: Slats are closed at 100%, horizontal at 50%.

Should the slats follow the elevation	no • yes

The slats should **not** follow the elevation (fixed reversing angle):
Adjust the desired position of the slats and the curtain.

Should the slats follow the elevation	**no**
Slat position in %	0 ... 100; 75
Shutter position in %	0 ... 100; 75
Use teaching object for new shading position *(curtain and slat positions will be saved, see info below)*	no • yes

The slats shall follow the elevation:
Three different elevation ranges can be set. A fixed curtain and slat position is specified for each.

Should the slats follow the elevation	**yes**
For an elevation less than (in degrees)	0 ... 90; 10
Slat position in %	0 ... 100; 95
otherwise Slat position in %	0 ... 100
Shutter position in %	0 ... 100
Use teaching object for new shading position *(only the curtain position will be saved, see info below)*	no • yes

Moving position (for awnings and blinds):

Awning position in % or blind position in %	0 ... 100; 75
Use teaching object for new shading position	no • yes

Use teaching object for new shading position: The curtain position it can be specified numerically or taught manually. For teaching set "use teaching object: Yes" and the "channel X shading position teaching object" is used for saving the position reached. Saving occurs for value = 1 and can for example be realized via a button linked to the teaching object. Numerical specifications already set are overwritten by the teaching object.

4.3.1.5. Automatic for windows (drives)

The menu item "Automatic" only appears if internal automatic is selected for "Control". Depending on the setting, the internal automatic functions take the outdoor temperature, indoor temperature and room air humidity into account, and allow forced ventilation via a communication object.

In order to fully utilize the internal ventilation automatic, information about the outdoor and indoor temperature and the inside air humidity must be present in the bus system.

Cold supply air lock:

The input object "cold supply air block" is linked with the output object of a temperature sensor. The input object can be a 1bit object (smaller or larger than a threshold value), as well as a 16bit object (measurement value).

Use cold supply air block	no • yes

Use cold supply air block	**yes**
Type of temperature input object	1 bit • 16 bit

1bit input object:

Type of temperature input object	**1 bit**

Ventilation is allowed if the bit is 0 and blocked if the bit is 1.

16bit input object:

Type of temperature input object	**16 bit**
Threshold value in 0.1°C	-300 ... 800; 50
Hysteresis in 0.1°C	1 ... 100; 20
Send current blocking status	no • yes

Ventilation is allowed if the measurement value is larger than the threshold value+hysteresis
and blocked if the measurement value is smaller than or equal to the threshold value.

Forced ventilation:

Use forced ventilation	no • yes

If forced ventilation is active ("use forced ventilation: Yes"), ventilation is started as soon as the communication object "forced ventilation" = 1.

Warm supply air block:

The input object "warm supply air block" is linked with the output object of one or more temperature sensors. The input object can be a 1bit object (smaller or larger than a threshold value), as well as a 16bit object (measurement value indoor/outdoor or target and actual value).

Use warm supply air block	no • yes

Use warm supply air block	**yes**
Type of input object	1 bit • 16 bit • 16 bit target/actual temperature

1bit input object:

Type of input object	**1 bit**

Ventilation is allowed if the bit is 0 and blocked if the bit is 1.

16bit input object:

Type of input object	**16 bit**
Threshold value in 0.1°C	-100 ... 200; 50
Hysteresis in 0.1°C	1 ... 100; 20
Send current blocking status	no • yes

Ventilation is allowed if the outdoor measurement value is smaller than the indoor measurement value+difference-hysteresis and blocked if the outdoor measurement value is greater than or equal to the indoor measurement value+difference.

16bit input object (target/actual temperature):
For this function the target value and actual value (measurement values) are imported from the 16bit object and evaluated.

Type of input object	**16 bit target/actual temperature**
Close if outdoor temperature exceeds the target value by (in 0.1°C)	0...255; 50
Hysteresis in 0.1°C	1...100; 20
Send current blocking status	no • yes

Ventilation is allowed if the outdoor measurement value is smaller than the target value+difference-hysteresis and blocked if the outdoor measurement value is greater than or equal to the target value+difference.

Open by temperature/humidity:

Open window	• never • if too high temperature • if too high room air humidity • if too high temperature or room air humidity

Indoor temperature:

These parameters appear if ventilated at "too high temperature" / "too high temperature or room air humidity". The input object can be a 1bit object (smaller or larger than a threshold value), as well as a 16bit object (measurement value or target and actual value).

Type of temperature input object	1 bit • 16 bit • 16 bit target/actual temperature

1 bit input object:

Type of temperature input object	**1 bit**

Ventilation is activated if the bit is 0 and blocked if the bit is 1.

16 bit input object:
The threshold value specification can be provided via a parameter or communication object.

Type of temperature input object	**16 bit**
Indoor temperature of threshold specification via	parameter • communication object

Threshold value per parameter:

Indoor temperature of threshold specification via	**parameter**
Indoor temperature threshold value in 0.1?	-100 … 500; 300
Hysteresis in 0.1?	1 … 100; 20
Send current temperature status	no • yes

Threshold value per communication object:
The threshold value is received via the communication object and can be changed additionally (e.g. button for target temperature + and -).

Indoor temperature threshold specification via	**communication object**
The value communicated last shall be retained	• not • after voltage returns • after voltage returns and programming
Start threshold value in 0.1°C valid until 1st communication	100 … 500; 300

Type of limit value change	• Absolute value with a 16bit comm. object • Lifting/lowering with a comm. object • Lifting/lowering with two comm. objects
Increments *(only when "lifting/lowering with comm. object")*	0.1°C ... 5°C; 1°C
Hysteresis in 0.1?	1 ... 100; 20
Send current temperature status	no • yes

16 bit input object (target/actual temperature):
For this function the target value and actual value (measurement values) are imported from the 16bit object and evaluated.

Type of temperature input object	**16 bit target / actual temperature**
Open if actual value exceeds the target value (in 0.1°C)	0...255; 20
Hysteresis in 0.1°C	1...100; 20
Send current blocking status	no • yes

Room air humidity:

These parameter appear if ventilated at "too high room air humidity" / "too high temperature or room air humidity". The input object can be a 1bit object (smaller or larger than a threshold value), as well as a 16bit object (measurement value).

Type of humidity input object	1 bit • 16 bit

1 bit input object:

Type of humidity input object	**1 bit**

Ventilation is activated if the bit is 0 and blocked if the bit is 1.

16 bit input object:

Type of humidity input object	**16 bit**
Indoor humidity threshold value in %	0 ... 100; 60
Hysteresis in 0.1°C	1 ... 100; 5
Send current humidity status	no • yes

Window opening:

If the ventilation by temperature or humidity is controlled via a 1bit input object, then enter the opening position in %.

Window opening in %	1...100

If the ventilation is controlled by temperature and humidity via a 16bit input object, then you can either set an opening position or open the windows incrementally. In the

step operation the temperature/humidity deviation is checked after a specified period of time, and may be increased/decreased by one step.

Window opening	absolute in % • incrementally
Window opening in % *(only if "window opening is absolute in %")*	1...100
incrementally by (in %) *(only if "window opening is in increments")*	1...100; 25
every (in minutes) *(only if "window opening is in increments")*	1...60; 3

4.3.1.6. Scenes (drives)

The 'Scenes' menu item only appears in the drive settings (shutters, blinds, awnings or windows) if 'Use scenes: yes' is selected. For each drive, you can save different movement positions as scenes, and be able to call them via the bus. 16 scenes are available per drive.

Use scenes	no • yes

You can assign each activated scene its own scene number, regardless of the intenal number of the actuator.

Scene number	0...127
Shutter position in % or *Blind position in % or* *Awning position in % or* *Window position in %*	0...100; 50
Slat position in % *(only for shutters)*	0...100; 70

4.3.1.7. Button inputs (drives)

The inputs 1 and 2 of KNX S1-B2 and the inputs from 3 upwards of KNX S2-B6 and KNX S4-B10 are designated by default for operating the devices on the outputs (channels), and are therefore parametrized directly in the settings of the output channels. They can be used as actuator button or bus button, for connected drives the inputs 1 (KNX S1-B2), 3, 5, 7 and 9 can be used *alternatively* for zero position sensors.

Operating mode	
Use input 3 / 5 / 7 / 9	• no • as a bus button • as an actuator switch • as a zero position sensor
Use input 4 / 6 / 8 / 10	• no • as a bus button • as an actuator switch

Input as bus button

The settings correspond to input 1/2 (see *Input as bus button*, page 40)

Input as actuator button

If this channel is used for the input to the control of the drive, then specify the button function and the control mode.

Button function	Up • Down Up • Down • Up/ Down On • Off • On/Off Open • Closed • Open/Closed	(shutter) (blind) (awning) (window)
Control mode*	• Standard • Standard inverted • Comfort mode • Dead man's switch	

*A detailed description of the setting options for the individual control modi can be found in the general part of chapter *Control modi for drive control*, page 70.

The input can be blocked using a blocking object. No operation is possible for an active block.

Use blocking object	No • Yes

If monitoring periods or movement range limits are used, no operation via the local button is possible in case of a bus voltage failure.

Input as zero position sensor

The zero position sensor is used for the movement range limit of the respective drive (see *Channel settings – drives*, page 45). In case of a defect zero position sensor a malfunctioning message can be sent to the bus.

Send malfunction message when zero position sensor is defective	No • Yes

4.3.2. Channel settings – switch functions

If two switchable devices are connected to the output channel, two separate channels will appear (e.g. "Channel A1 – switch function" and "Channel A2 – switch function"). First set the general specifications for the connected device and, if necessary, activate the connections, time functions and blocking objects. A diagram is found in chapter *Correlation connection – time switch – block*, page 74.

Relay operation	closer • opener
Behavior for bus voltage failure	• no change • opened • closed
Behavior for bus voltage return	• as before bus voltage failure • no change • opened • closed
Behavior after reset and ETS download	• opened • closed
Use status object	• no • as an active feedback object • as a passive status object
Use connection function (see *Connection (switch functions)*, page 66)	no • yes
Use time function (see *On/Off switch delays, time switching (switch functions)*, page 66)	• no • as a switch on delay • as a switch off delay • as a switch on and off delay • as a staircase light timer
Use blocking object	no • yes
Use scenes	no • yes

4.3.2.1. Connection (switch functions)

The menu item "connection" appears only for the settings for the switch function channel if selected "Use switch functions: Yes".

In the connection object ("Channel X connection") different communication objects can be linked with AND or OR. E.g. a light can only be switched on if the button input is active AND twilight is active.

Connection type	AND • OR
Value of the connection object after bus voltage returns	0 • 1

4.3.2.2. On/Off switch delays, time switching (switch functions)

The menu item appears only for the settings for the switch function channel if a time function is chosen. The menu item has the same name as the selected function.

With the switch on and off delay, a switch can be used for example for a HVAC unit and light. Through the switch on delay the ventilator will only start if the light has already been turned on for a few minutes. The switch off delay effects that the ventilator will follow up if the button was operated again and the light is already off.

The staircase timer function makes sure for example that the light is on for a defined period of time and then turns off automatically.

Switch on delay

The switch on delay is set with a time basis and time factor (e.g. 1 min × 4 corresponds to 4 minutes). Additionally it is specified if the time interval for a repeat receipt of a switch-on telegram is extended ('triggered again", e.g. by pressing the button again) and what happens when a switch off telegram arrives from the bus.

Time basis	0.1 s • 1 s • 1 min • 1 h
Time factor	4...255; 4
Switch on delay cannot	be triggered again • can be triggered again
Off telegram during staircase light period affects	nothing • direct turn off

Switch off delay

The switch off delay is set with a time basis and time factor (e.g. 1 min × 4 corresponds to 4 minutes). Additionally it is specified if the time interval for a repeat receipt of a switch-off telegram is extended ("can be triggered again", e.g. by pressing the button again) and what happens when a switch off telegram arrives from the bus.

Time basis	0.1 s • 1 s • 1 min • 1 h
Time factor	4...255; 4
Switch on delay cannot	be triggered again • can be triggered again
On telegram during staircase light period affects	nothing • direct turn on

Staircase lighting timer

The staircase time switch sets with a time basis and time factor how long the light will remain on (e.g. 1 s × 10 corresponds to 10 seconds). Additionally it is specified if the time interval for a repeat receipt of a switch-on telegram is extended ("triggered again", e.g. by pressing the button again) and what happens when a switch off telegram arrives from the bus.

Time basis	0.1 s • 1 s • 1 min • 1 h
Time factor	4...255; 10
Staircase light time can	not be triggered again • can be triggered again
Off telegram during staircase light period affects	nothing • direct turn off

4.3.2.3. Blocking function (switch functions)

The menu item "blocking function" appears only for the settings for the switch function channel if selected "Use blocking functions: Yes".

The output channel can be blocked by a block telegram. What happens during the blocking, for bus voltage return and after the blocking is set here. The manual operation is then not possible for an active block.

The function can be used for example for a light, which is turned on when pressing a "panic button" (=trigger for blocking function) and cannot be turned off any longer.

Blocking function blocks for	0 • 1
Value of the blocking object after bus voltage returns	0 • 1
Response when blocking	no change • opened • closed
Response upon release	follows switch command • opened • closed

4.3.2.4. Scenes (switch functions)

The ‘Scenes’ menu item only appears in the settings of the switch function channel if ‘Use scenes: yes’ is selected.

For each drive, you can save different movement positions as scenes, and be able to call them via the bus. 16 scenes are available per drive.

Use scenes	no • yes

You can assign each activated scene its own scene number, regardless of the intenal number of the actuator.

Scene number	0...127
Switching status	• inactive • activ

4.3.3. Button input (switch functions)

The inputs 1 and 2 of KNX S1-B2 and the inputs from 3 upwards of KNX S2-B6 and KNX S4-B10 are designated for operating the devices on the outputs (channels) and are therefore parametrized directly in the settings of the output channels. They can be used as actuator button or bus button.

Operating mode	
Use input 3 / 4 / 5 / 6 / 7 / 8 / 9 / 10	• No • as a bus button • as an actuator switch

Input as bus button

The setting corresponds to input 1/2(see *Input as bus button*, page 40)

Input as actuator button

If the input to the control of the device is used at this channel, then specify the button function.

Button function	Switch• Selector switch

If a button with switch function is assigned to the input, select the button function "Switch" and specify what happens when pressing/releasing the button and when to send.

Button function	**Switch**
Command when pressing the button	• switch on • switch off • nothing
Command when releasing the button	• switch on • switch off • nothing

The input can be blocked using a blocking object. Set what happens when (de)activating the block. No operation is possible for an active block.

Use blocking object	No • Yes

Use blocking object	**Yes**
Once when activating the blocking	• switch on • switch off • nothing
Once when deactivating the blocking	• switch on • switch off • nothing • evaluate current state

If a button with selector switch function is assigned to the input, select the bus function "Selector switch" and specify what happens when pressing and releasing the button.

Button function	**Selector switch**
Command when pressing the button	• switch over • nothing
Command when releasing the button	• switch over • nothing

The input can be blocked using a blocking object. No operation is possible for an active block.

Use blocking object	No • Yes

5. General part

5.1. Output channel with drive

5.1.1. Control modi for drive control

If inputs are used as buttons for operating shading or windows, then different control modi can be set.

Control mode	• Standard • Standard inverted • Comfort mode • Dead man's switch

Standard:

If briefly operated, the drive will move incrementally or stops. If operated longer, the drive will move up to the end position. The time difference between "short" and "long" is set individually.

Control mode	**Standard**
Behavior during button operation: short = stop/increment long = Up or Down	
Time between short and long in 0.1 seconds	1...50; 10

Standard inverted:

When pushed shortly, the drive moves up to the end position. When pushed for longer, the drive moves incrementally or stops. The time difference between "short" and "long" and the repeat interval is set individually.

Control mode	**Standard inverted**
Behavior during button operation: short = Up or Down long = Stop/Step	
Time between short and long in 0.1 seconds	1...50; 10
Repeat the step command for a long button press	every 0.1 s • every 2 sec; every 0.5 sec

Comfort mode:

In the **comfort mode** pushing the button briefly, a bit longer and long will trigger different responses of the drive. The time intervals are set individually.

By pushing the button (shorter than adjustable time 1) the drive will be positioned (resp. stopped) incrementally.

If the drive is to be moved a bit farther, then a little longer push is needed (longer than time 1 but shorter than time 1+2). The drive stops immediately when releasing the button.
If the drive must be moved independently into the end position, the button is released only after times 1 + 2 have expired. The move can be stopped by briefly pushing.

Abb. 1
Time interval comfort mode diagram

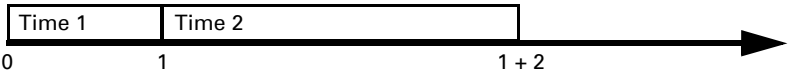

Point in time 0:	*Push of button, start of time 1*
Release before time 1 expired:	*step (or stop if drive is moving)*
Point in time 1:	*End of time 1, start of time 2* *Moving command*
Release after time 1 expired *but before time 2 expires:*	*Stop*
Release after time 1 + 2 expired:	*Move into end position*

Control mode	**Comfort mode**
Behavior during button operation: Button is pushed and released before time 1 expired = stop/step held longer than time 1 = Up or Down released between time 1 and 1-2= stop released after time 1 +2 = no more stop	
Time 1	0.0s ... • 2 s; 0.4 s
Time 2	0 s • 2 s; 2 s

Dead man's switch:

The drive moves as soon as the button is pushed and stops as soon as the button is released.

Control mode	**Dead man's switch**
Behavior during button operation: Push button = Up or Down command Release button = Stop command	

5.1.2. Connection option for zero position sensors

See also section *Movement Range Limit* in chapter *Control (drives)*, page 47. The examples and the communication object numbers refer to the mutual master-slave coupling of drives at the output channel A and channel B.

Drive channel A is Master, zero position sensor at input 3 of the actuator, drive channel B is Slave, zero position sensor at input 5 of the actuator:

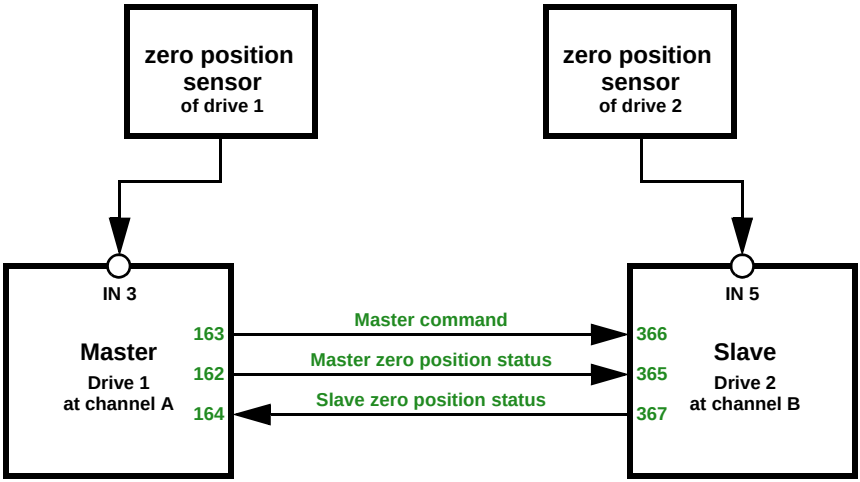

Drive channel A is Master, zero position sensor at input 3 of the actuator, drive channel B is Slave, zero position sensor via bus:

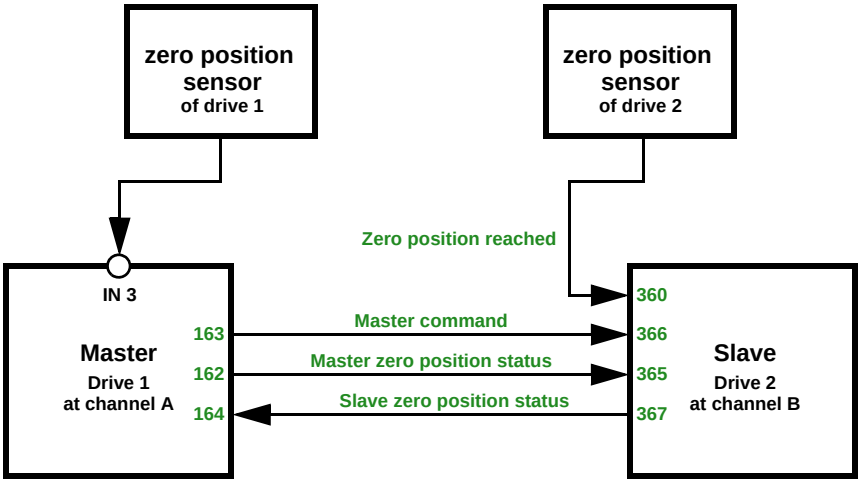

Drive channel A is Master, zero position sensor via bus, drive channel B is Slave, zero position sensor at input 5 of the actuator:

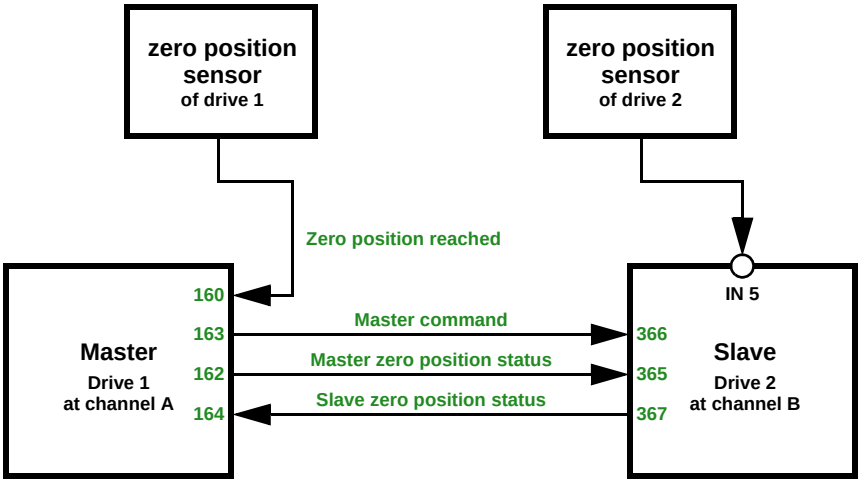

Drive channel A is Master, zero position sensor via bus, drive channel B is Slave, zero position sensor via bus:

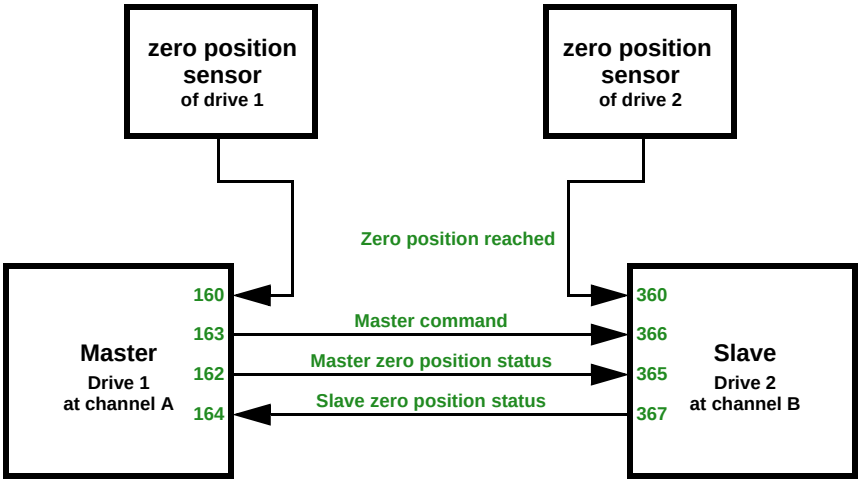

5.2. Output channel with switch function

5.2.1. Correlation connection – time switch – block

Application 1: Staircase light at channel A1, that can only be switchable at twilight/ night (linking) and that is turned on during a fire alarm (blocking).

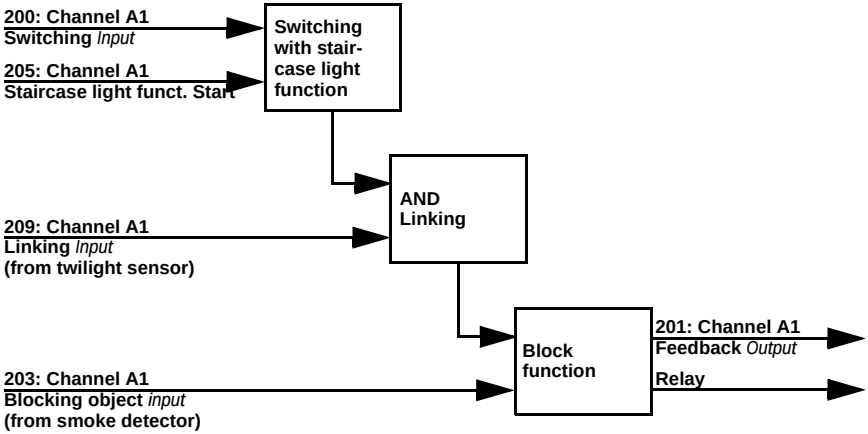

When switching via communication object "Channel A1 switch" (200), the light is turned on or off normally. When switching via object "Channel A1 staircase light function start" (205), the staircase light time function is activated. The time function has priority, i.e. the status triggered by normal switching is overwritten.

Elsner Elektronik GmbH Control and Automation Engineering
Sohlengrund 16
75395 Ostelsheim
Germany
Phone +49 (0) 70 33 / 30 945-0 info@elsner-elektronik.de
Fax +49 (0) 70 33 / 30 945-20 www.elsner-elektronik.de

Technical support: +49 (0) 70 33 / 30 945-250